Heat Dissipation Low Noise

Cabinet Axial Exhaust Fan

Ball Bearing | Inverter-Powered Boosting | DC/AC

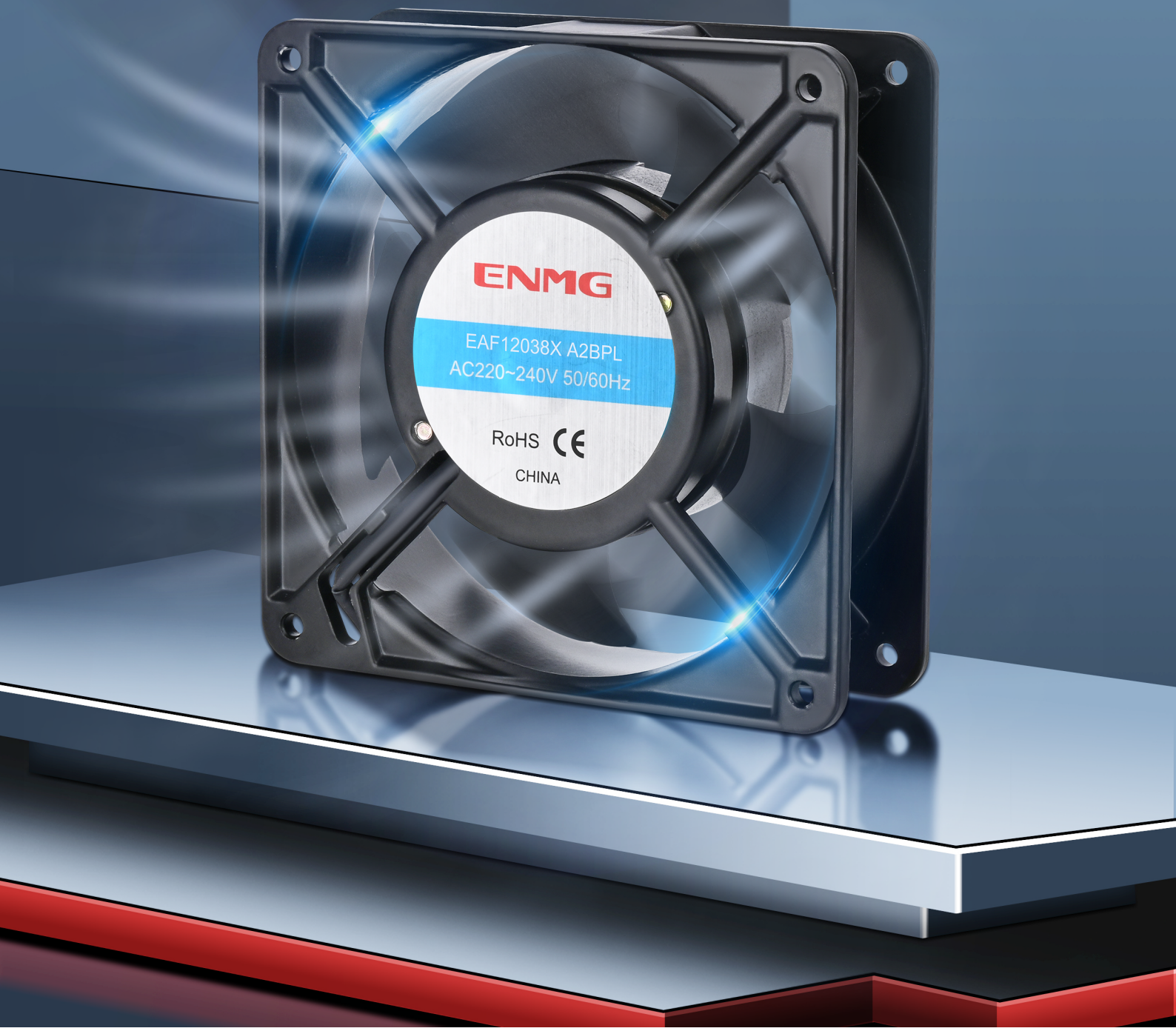



With Built-in Leads

Heat-Resistant & Anti-Aging





Technical Enhancement

Vibration Reduction & Low Noise



Ball Bearing

Long Lifespan

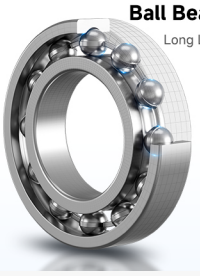

Inverter-Powered Boosting

110-240VAC/DC 18-36VAC/DC 12-28VDC Selectable



High-Quality Motor

Copper Alloy Coil, Stable Operation,24h Continuous Operation

High-Toughness Flame-Retardant Fan Blades

Noise Reduction

Engineering Plastic Housing

Lightweight

(EAF8025H A2BPL/EAF12038X A2BPL Aluminum Alloy Housing)



Copper Alloy Coil

24h Continuous Operation

Specifications

Operating Temperature: -30~65°C

	Model	Dimensions	Voltage	Power	Speed	Airflow	Housing	Column Wrapping
Inverter-Powered Boosting	ETF6038H E2BPL-B	60*60*38mm	110-240VAC/DC	2W	3900RPM	21CFM	Plastic	With
	ETF8025H E2BPL	80*80*25mm	110-240VAC/DC	4W	3500RPM	48CFM	Plastic	Without
	ETF8038H E2BPL-B	80*80*38mm	110-240VAC/DC	6W	4000RPM	50CFM	Plastic	With
	ETF12038H E2BPL-B	120*120*38mm	110-240VAC/DC	15W	4000RPM	140CFM	Plastic	With
AC Fan	EAF8025H A2BPL	80*80*25mm	220-240VAC/50-60Hz	17W	2500RPM	30CFM	Al Alloy	Without
	EAF12038X A2BPL	120*120*38mm	220-240VAC/50-60Hz	23W	2500RPM	35CFM	Al Alloy	Without
DC Fan	EDF12025M-D24BPL-B	120*120*25mm	24VDC	4.08W	2700RPM	82.11CFM	Plastic	With
	EDF12038M-D48BPL-B	120*120*38mm	48VDC	6.24W	3000RPM	113.89CFM	Plastic	With

* Product features and appearance structure are subject to change due to technological innovation and improvement without prior notice;
Due to reasons such as shooting, typesetting, printing, etc., there will be slight differences between the product images and the actual products.

LRI Distribuída no Brasil pela LRI | vendas@lri.com.br | 51 2129-3000

Product Outline Dimension Drawing

EAF8025H A2BPL

Unit: mm±0.3

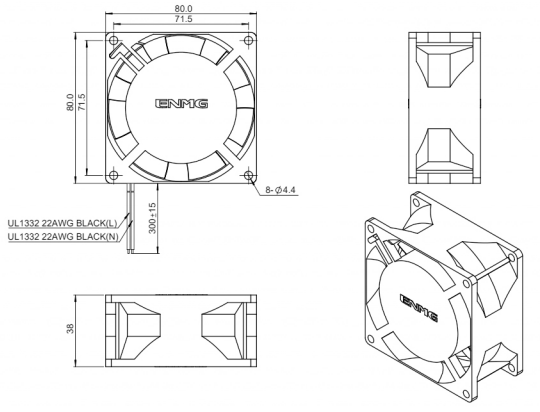

EAF12038X A2BPL

Unit: mm±0.3

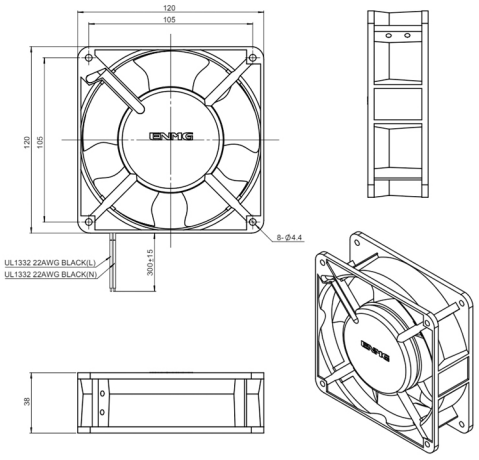

EDF12025M-D24BPL-B

Unit: mm±0.3

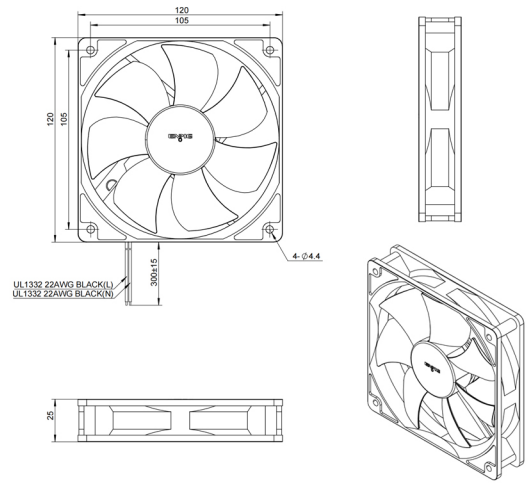

EDF12038M-D48BPL-B

Unit: mm±0.3

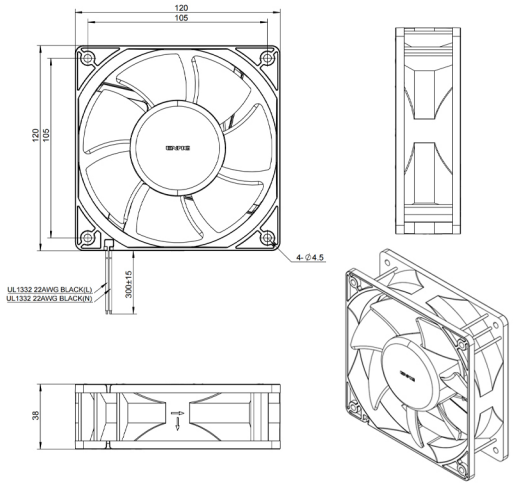

ETF8038H E2BPL-B

Unit: mm±0.3

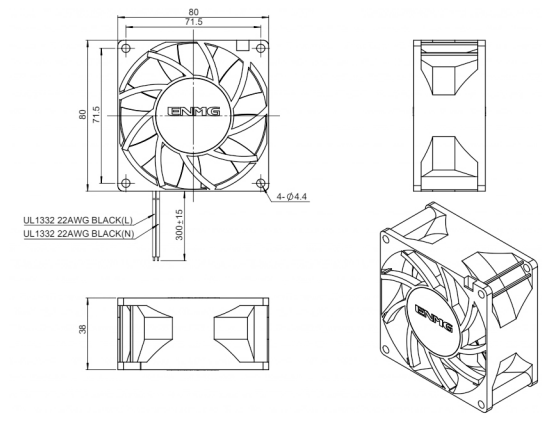

ETF8025H E2BPL

Unit: mm±0.3

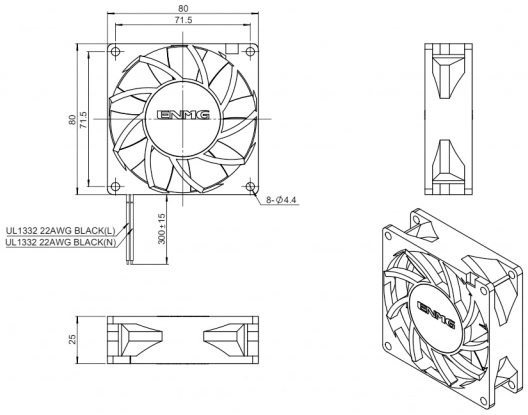

* Product features and appearance structure are subject to change due to technological innovation and improvement without prior notice;
Due to reasons such as shooting, typesetting, printing, etc., there will be slight differences between the product images and the actual products.

Distribuída no Brasil pela LRI | vendas@lri.com.br | 51 2129-3000

ETF6038H E2BPL-B

Unit: mm±0.3

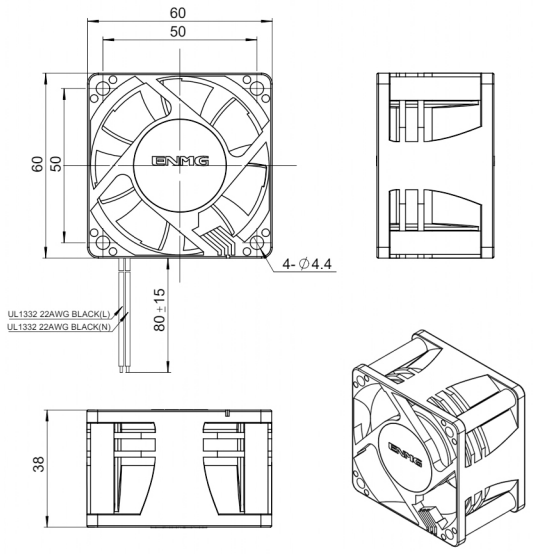

ETF12038H E2BPL-B

Unit: mm±0.3

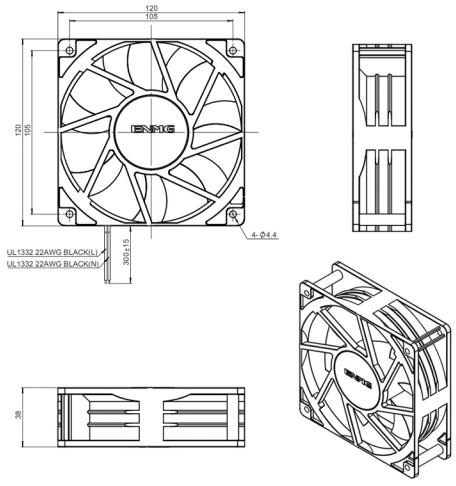

Multi-Angle Bracket

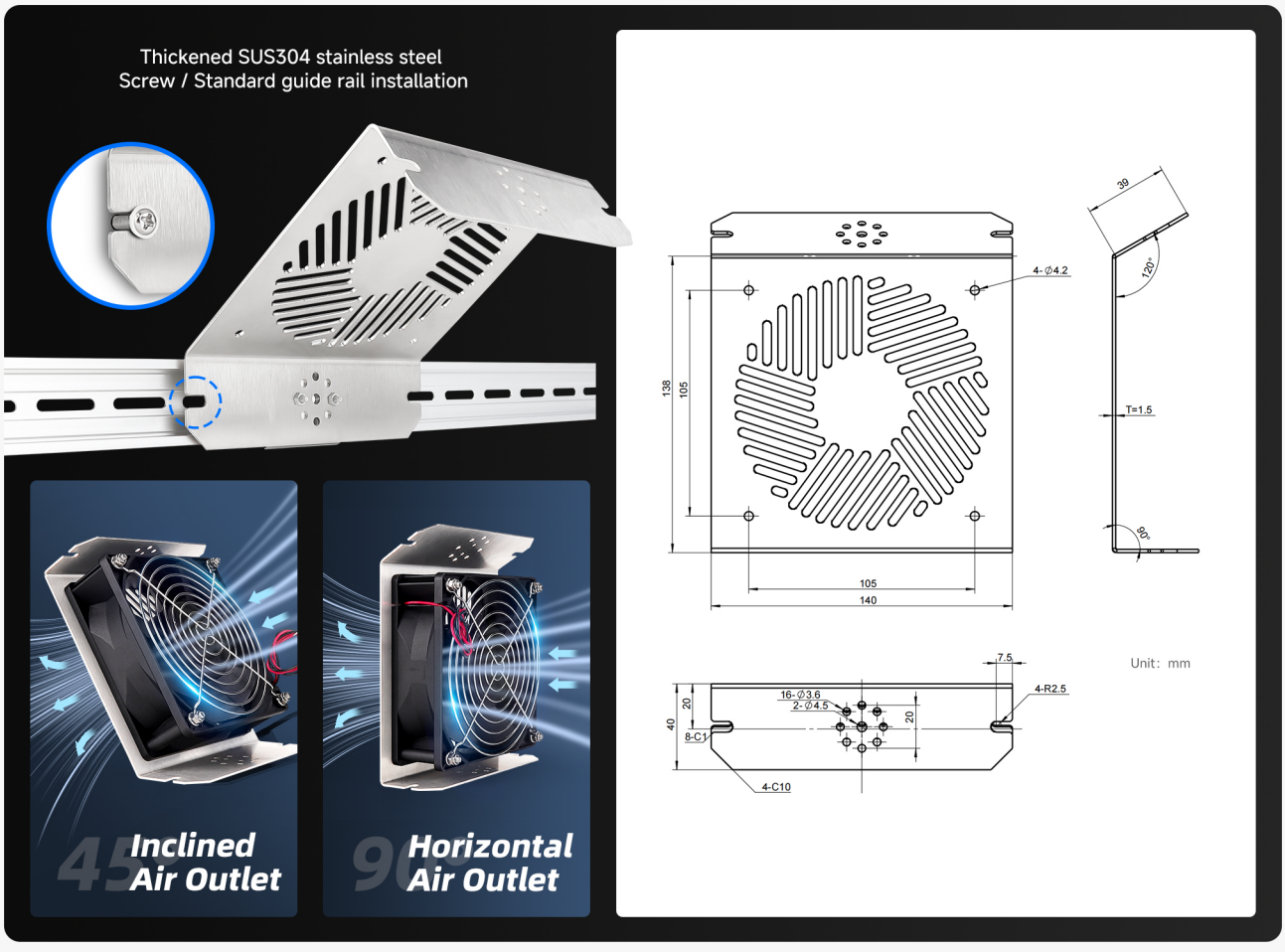

* Product features and appearance structure are subject to change due to technological innovation and improvement without prior notice;
Due to reasons such as shooting, typesetting, printing, etc., there will be slight differences between the product images and the actual products.

Distribuída no Brasil pela LRI | vendas@lri.com.br | 51 2129-3000







* Product features and appearance structure are subject to change due to technological innovation and improvement without prior notice;
Due to reasons such as shooting, typesetting, printing, etc., there will be slight differences between the product images and the actual products.

LRI Distribuída no Brasil pela LRI | vendas@lri.com.br | 51 2129-3000

ENMG 恩爵

Started in 2012, exploring the frontier, leading innovation, self-transformation, the world of ideas.

始于2012年，探索前沿 、 创新引领 、 自我蜕变 、 理念世界。

ENMG INTELLIGENT TECHNOLOGY

恩爵ENMG智能科技

Zhejiang ENMG Intelligent Technology Co., Ltd.

浙江恩爵智能科技有限公司

Wenzhou Yuanzhang Electric Co., Ltd.

温州元璋电气有限公司

公司地址 Address： 浙江省乐清市柳市镇柳江路3788号

联系方式 Telephones： 400-996-2708

官方网站 Website： www.enjue.cc

迪威模型 3D Model： www.3dwhere.com/user/135269

微信公众号
WeChat Public

微信客服
WeChat Clientele Services

入驻平台 ENTRY PLATFORM

在线搜索“恩爵旗舰店”，线上下单实惠方便!

Search for “ENMG Flagship Store” online, ordering online is affordable and convenient !

天猫 Tmall　淘宝 Taobao　1688　京东 JD　拼多多 PDD　抖音 TikTok　速卖通 AliExpress

LRI Distribuída no Brasil pela LRI | vendas@lri.com.br | 51 2129-3000