Cabinet environment constant temperature regulation system

Thermoelectric Cooler

Cooling and heating switching | Low noise | Environmentally friendly



LRI Distribuída no Brasil pela LRI | vendas@lri.com.br | 51 2129-3000

Product Details

New generation semiconductor refrigerator, multiple innovations

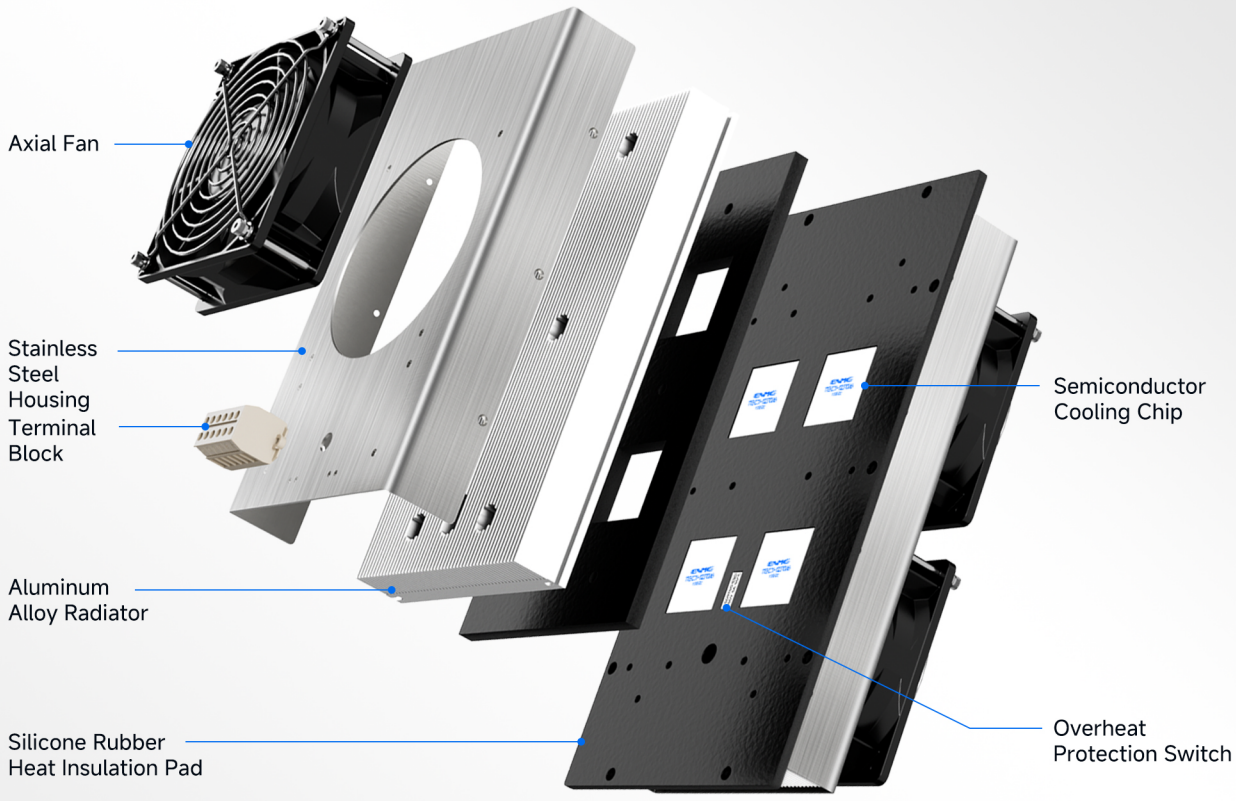

Cooling Core

Semiconductor cooling chip,cools down quickly, stable cooling capacity.



SUS304
Sturdy Body

Quality metal parts, doubled structural strength.



Rounded edges to prevent scratches

Thickened
Heat Insulation Pad

Buffer Protection.

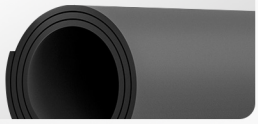

High-multiple teeth
Aluminum Alloy

CNC precision machining

Surface anodization treatment

Heat dissipation efficiency and service life improved significantly.



High Air Volume
Low-Noise Axial Fan



4800RPM

*The cooler has no other moving parts besides these.

Protection Class*

Unaffected by harsh environments.

IP65

*Do not touch the terminal block with liquids

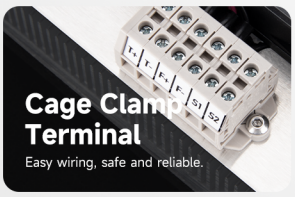

Cage Clamp Terminal

Easy wiring, safe and reliable.

Overheat Protection
Warning

Built-in snap-action thermal protection switch,automatic power-off.

KSD 9700
250V 5A 90°C

* Product features and appearance structure are subject to change due to technological innovation and improvement without prior notice;
Due to reasons such as shooting, typesetting, printing, etc., there will be slight differences between the product images and the actual products.

Distribuída no Brasil pela LRI | vendas@lri.com.br | 51 2129-3000

Innovative Semiconductor

8 major innovative advantages



Working Principle	Peltier effect （solid state）
Service Life	Extremely high (no moving parts)
Temperature Control Precision	Extremely high（±0.1°C）
Anti-Vibration / Impact	Excellent
Noise Level	Low (only the sound of the fan)
Maintenance	Basically maintenance-free
Environmental Friendliness	High（no refrigerant）
Volume / Weight	Small、Light

360° All-Round Air Circulation

Efficient cooling, rapid temperature drop
The semiconductor can work continuously for a long time.

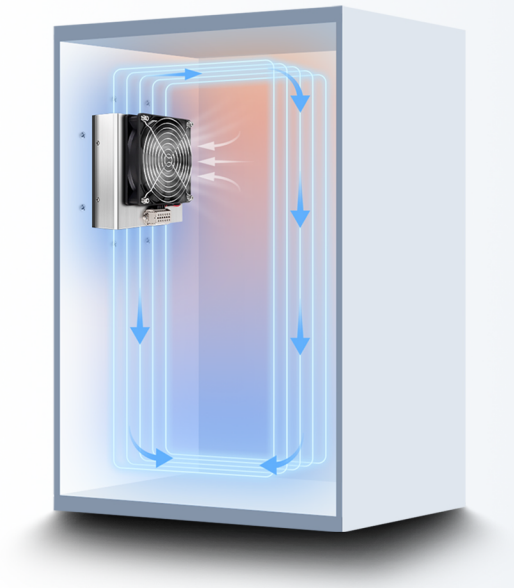

Three Installation Methods

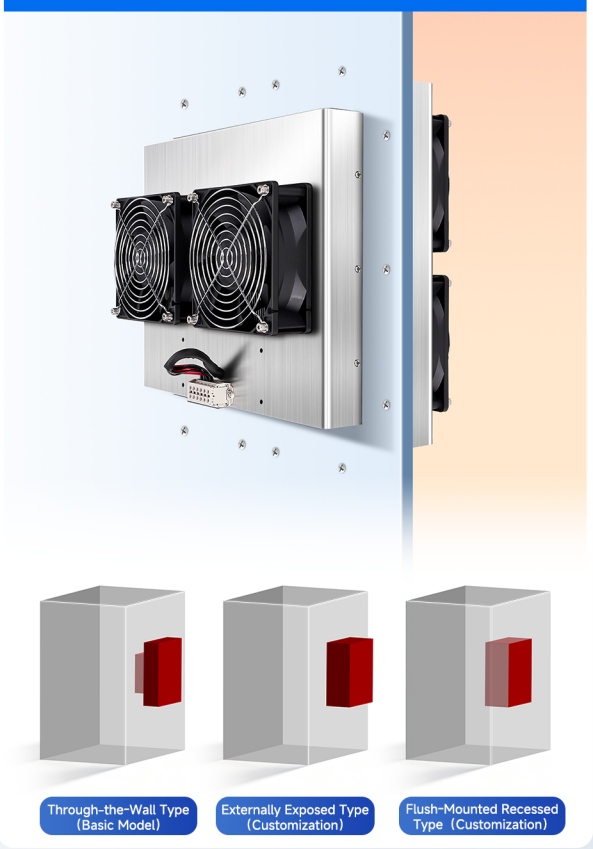

* Product features and appearance structure are subject to change due to technological innovation and improvement without prior notice;
Due to reasons such as shooting, typesetting, printing, etc., there will be slight differences between the product images and the actual products.

Distribuída no Brasil pela LRI | vendas@lri.com.br | 51 2129-3000

Three Heat Dissipation Methods

One side of a thermoelectric cooler (TEC) cools, the other heats. The cooling capacity and heat are transferred to the surroundings via cold-side/hot-side heatsinks and their fans.The cold-side heatsink and fan form an internal circulation system to cool the enclosed space; the hot-side ones, on the other hand, make an external system to dissipate heat outward.



AA Air to Air

Through the cold-end heat sink and fan, circulate cold air in a confined space to achieve cooling.



DA Direct to Air

Precise fit with the cold-end high-thermal-conductivity precision-machined aluminum plate enables direct heat conduction for rapid equipment cooling.



LA Liquid to Air

Through the circulating liquid system,Flows through the cold-end heat sink (precision-machined aluminum plate).Cool the liquid down.

General Regulation System

Solution

It supports the optional configuration of a dedicated digital-display intelligent temperature controller and a guide-rail type switching power supply.



Recommended for use with an intelligent temperature controller

Unattended Operation Automatic Start-Stop

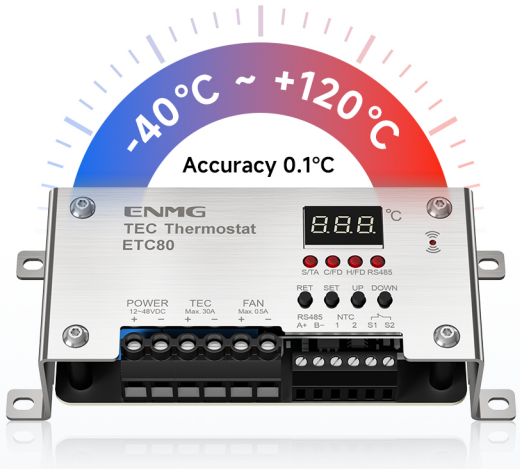

Auto Switching
Refrigeration, heating, start/stop

Temperature Control
-40°C ~ +120°C, accuracy 0.1°C

Installation Methods
Externally independent, customizable cooler for surface mounting

Fault Alarm
Equipment safety

Preset fan shutdown
Prevent condensation formation

RS485
Temperature data acquisition and remote control

* Product features and appearance structure are subject to change due to technological innovation and improvement without prior notice;
Due to reasons such as shooting, typesetting, printing, etc., there will be slight differences between the product images and the actual products.

Distribuída no Brasil pela LRI | vendas@lri.com.br | 51 2129-3000

Specification

Model Description

The design of product models and ordering codes is intended to cover all possible specifications of this series of products, and they cannot be combined arbitrarily.If you have any questions during the first selection, please contact the technical service engineers for confirmation.If the technical specifications in the product library cannot meet your needs, customization is available! Items marked with * are customized products.

HET A - 101 T - 053 12VDC

① ② ③ ④ ⑤ ⑥

① Product Name

Code	Interpretation
HET	Peltier effect Semiconductor Cooler

② Type

Code	Interpretation
A	(Air to Air) Thermoelectric Air Conditioners
L	*(Liquid to Air) Liquid Chillers
D	*(Direct to Air) Cold Plates
U	*(Direct to Liquid) Ultra - low temperature cold plates
X	*(Liquid to Liquid) Liquid Chillers

③ Specifications of Hot-Side Heat Sink

Code	Interpretation
101	W100×L150mm
102	W100×L215mm
151	W150×L200mm
152	W150×L300mm
153	W150×L400mm
154	W300×L300mm
156	W300×L400mm

④ Installation Method

Code	Interpretation
T	Through-the-Wall Installation (Basic Type)
F	*Exposed Surface External Mounting
H	*Flush-Mounted Recessed Installation

⑤ Maximum Cooling Capacity(W)

053	106	212	424
062	124	248	496
075	150	300	600
080	160	320	640
088	176	352	704
097	194	388	776
106	212	424	848
133	266	532	1064

⑥ Rated Voltage

12VDC	24VDC	48VDC	100~240VAC

HETA-101T-075 12VDC



Basic Parameters

Cooling Method : Air to Air	Temperature Control Device : Optional
Cooling Capacity : Max.75W	Weight : 1.48kg
Power Consumption : Max.102W	Noise : 39dB(A)
Rated Voltage : DC12V	Operating Temperature : -20~70°C
Cooling Current : Starting 8.5A Stable 7A	Protection Level : IP65

Overall Dimensions

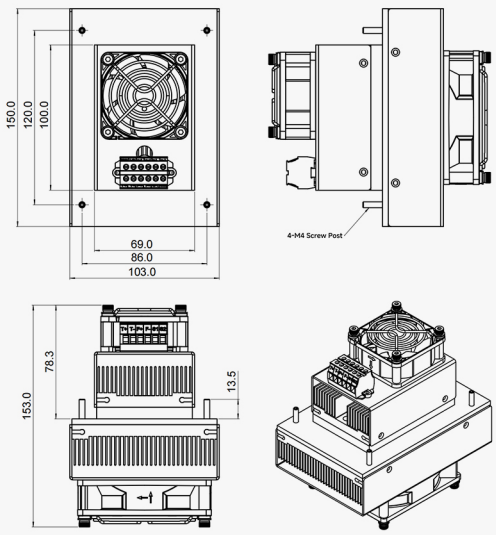

Mounting Hole Dimensions

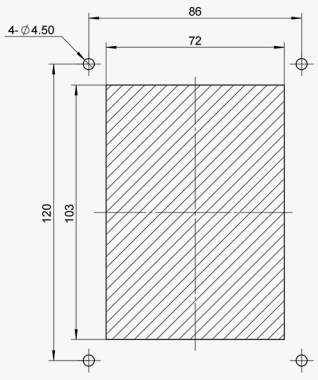

*Unit: mm, Dimension data may have deviations; please refer to the actual product for accuracy.

* Product features and appearance structure are subject to change due to technological innovation and improvement without prior notice;
Due to reasons such as shooting, typesetting, printing, etc., there will be slight differences between the product images and the actual products.

Distribuída no Brasil pela LRI | vendas@lri.com.br | 51 2129-3000

HETA-151T-106 24VDC



Basic Parameters

Cooling Method : Air to Air	Temperature Control Device : Optional
Cooling Capacity : Max.106W	Weight : 3.68kg
Power Consumption : Max.144W	Noise : 43dB(A)
Rated Voltage : DC24V	Operating Temperature : -20~70°C
Cooling Current : Starting 6A Stable 4.8A	Protection Level : IP65

Overall Dimensions

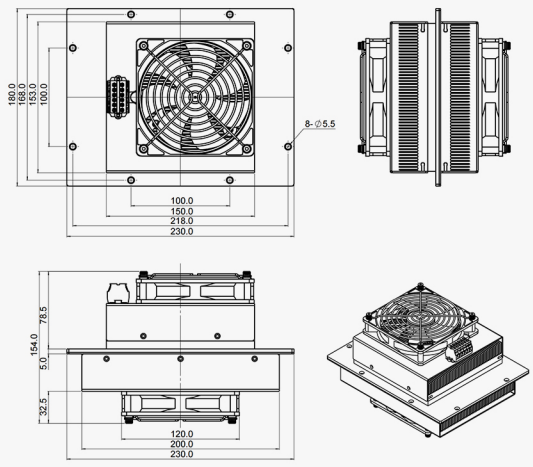

Mounting Hole Dimensions

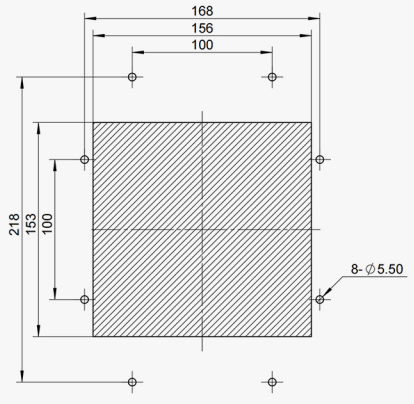

*Unit: mm, Dimension data may have deviations; please refer to the actual product for accuracy.

HETA-102T-150 24VDC



Basic Parameters

Cooling Method : Air to Air	Temperature Control Device : Optional
Cooling Capacity : Max.150W	Weight : 2.18kg
Power Consumption : Max.204W	Noise : 39dB(A)
Rated Voltage : DC24V	Operating Temperature : -20~70°C
Cooling Current : Starting 8.5A Stable 7A	Protection Level : IP65

Overall Dimensions

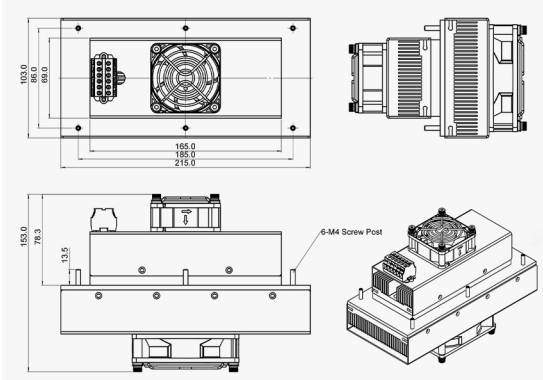

Mounting Hole Dimensions

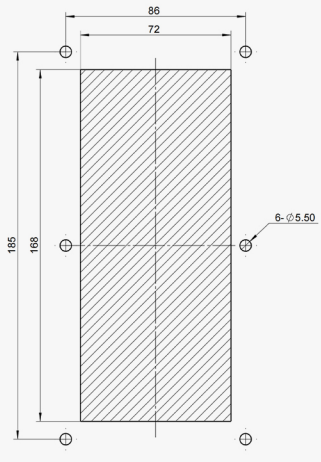

*Unit: mm, Dimension data may have deviations; please refer to the actual product for accuracy.

* Product features and appearance structure are subject to change due to technological innovation and improvement without prior notice;
Due to reasons such as shooting, typesetting, printing, etc., there will be slight differences between the product images and the actual products.

LRI Distribuída no Brasil pela LRI | vendas@lri.com.br | 51 2129-3000

HETA-152T-212 48VDC



Basic Parameters

Cooling Method : Air to Air	Temperature Control Device : Optional
Cooling Capacity : Max.212W	Weight : 6.18kg
Power Consumption : Max.288W	Noise : 50dB(A)
Rated Voltage : DC48V	Operating Temperature : -20~70°C
Cooling Current : Starting 6A Stable 4.8A	Protection Level : IP65

Overall Dimensions

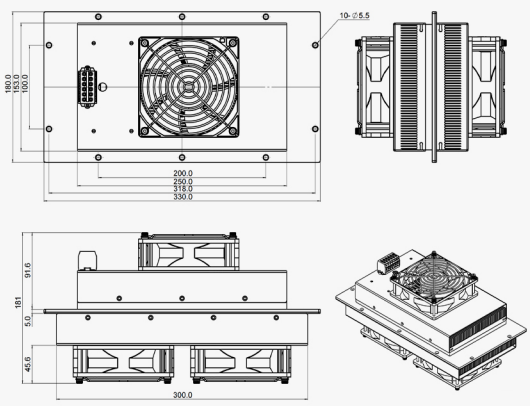

Mounting Hole Dimensions

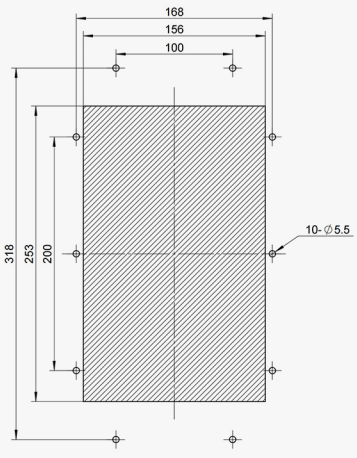

*Unit: mm, Dimension data may have deviations; please refer to the actual product for accuracy.

HETA-153T-300 48VDC



Basic Parameters

Cooling Method : Air to Air	Temperature Control Device : Optional
Cooling Capacity : Max.300W	Weight : 7.66kg
Power Consumption : Max.408W	Noise : 50dB(A)
Rated Voltage : DC48V	Operating Temperature : -20~70°C
Cooling Current : Starting 8.5A Stable 7A	Protection Level : IP65

Overall Dimensions

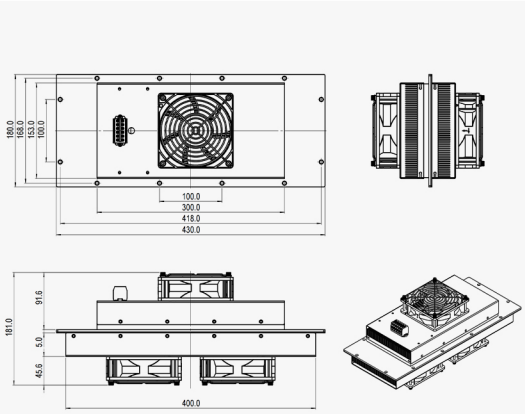

Mounting Hole Dimensions

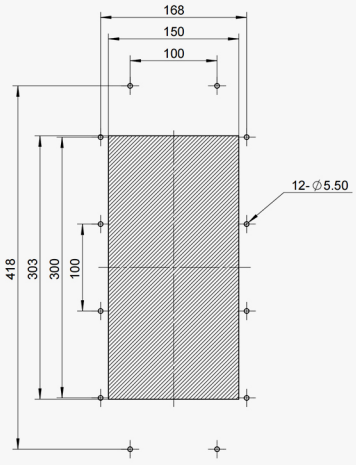

*Unit: mm, Dimension data may have deviations; please refer to the actual product for accuracy.

* Product features and appearance structure are subject to change due to technological innovation and improvement without prior notice;
Due to reasons such as shooting, typesetting, printing, etc., there will be slight differences between the product images and the actual products.

Distribuída no Brasil pela LRI | vendas@lri.com.br | 51 2129-3000

HETA-156T-600 48VDC



Basic Parameters

Cooling Method : Air to Air	Temperature Control Device : Optional
Cooling Capacity : Max.600W	Weight : 14.48kg
Power Consumption : Max.816W	Noise : 53dB(A)
Rated Voltage : DC48V	Operating Temperature : -20~70°C
Cooling Current : Starting 17A Stable 14A	Protection Level : IP65

Overall Dimensions

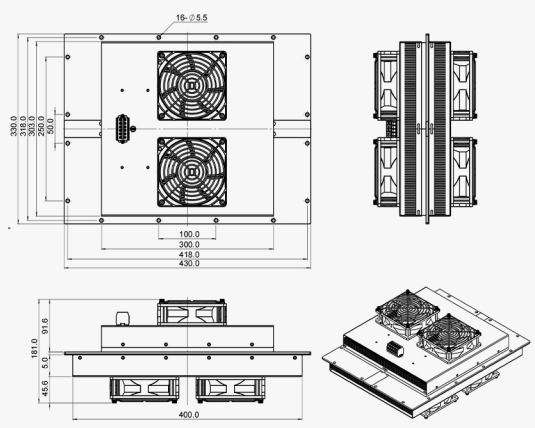

Mounting Hole Dimensions

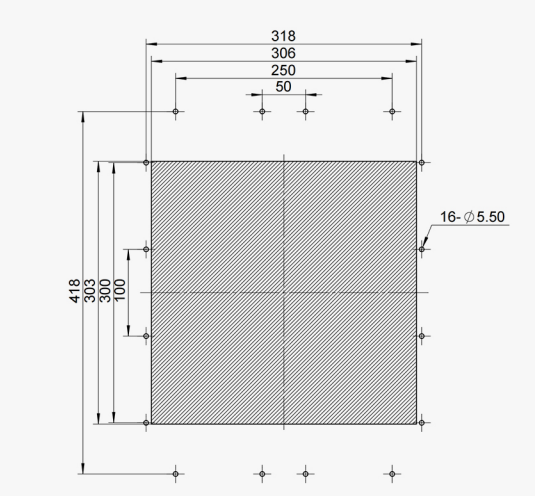

*Unit: mm, Dimension data may have deviations; please refer to the actual product for accuracy.

HETA-154T-424 48VDC



Basic Parameters

Cooling Method : Air to Air	Temperature Control Device : Optional
Cooling Capacity : Max.424W	Weight : 11.69kg
Power Consumption : Max.576W	Noise : 53dB(A)
Rated Voltage: DC48V	Operating Temperature : -20~70°C
Cooling Current : Starting 12A Stable 9.6A	Protection Level : IP65

Overall Dimensions

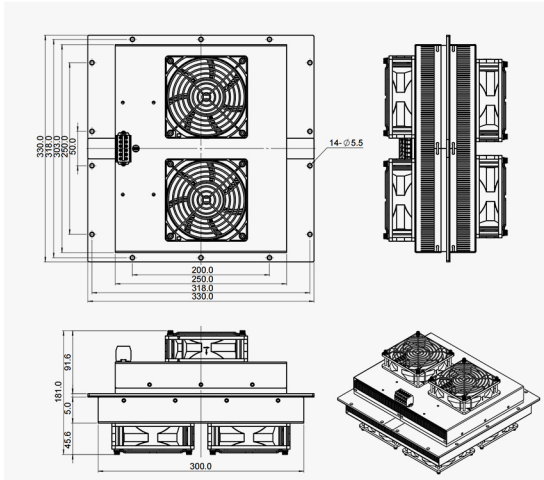

Mounting Hole Dimensions

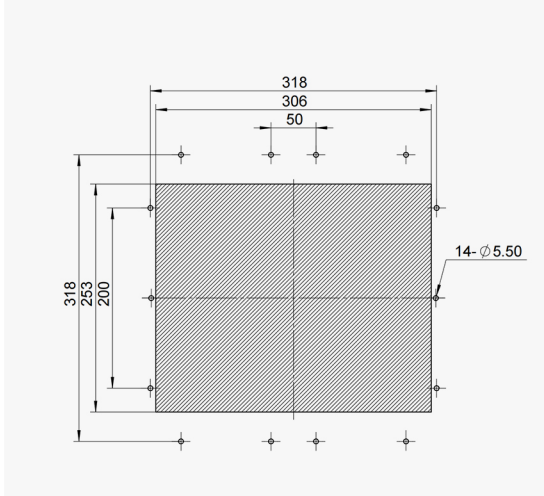

*Unit: mm, Dimension data may have deviations; please refer to the actual product for accuracy.

* Product features and appearance structure are subject to change due to technological innovation and improvement without prior notice;
Due to reasons such as shooting, typesetting, printing, etc., there will be slight differences between the product images and the actual products.

Distribuída no Brasil pela LRI | vendas@lri.com.br | 51 2129-3000

Installation Instructions

Installation Height:

Optimal position: 2/3 from cabinet bottom

Installation Direction:

The terminal block faces downward
Open a hole according to the size of the cooling end and embed it

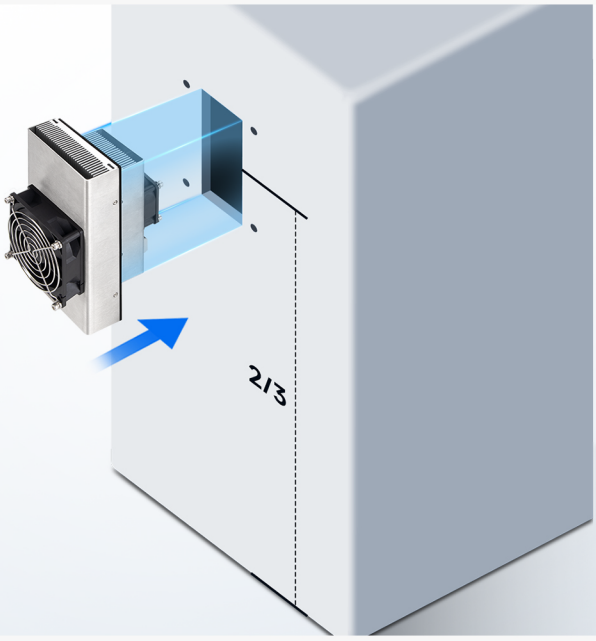

Terminal Description and Wiring Logic

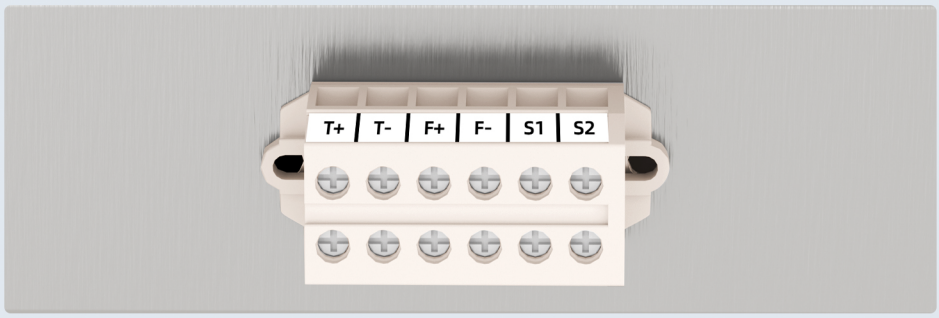

- T+: POWER TERM +
- T-: POWER TERM -
- F+: Fan Power Supply Terminal +
- F-: Fan Power Supply Terminal -
- S1、S2: NC Overtemp Protection Switch Output
  1.S1 and S2 output a normally closed signal under normal operation; they open when overheated.
  2.When the Enjue ETC80 intelligent controller is not equipped, S1 and S2 can be left unconnected.

Refrigerator Wiring Diagram



Refrigerator+Thermostat+Power Wiring Diagram

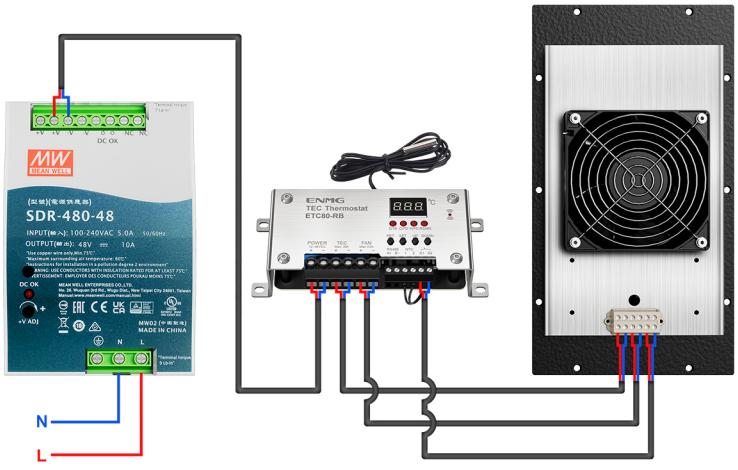

* Product features and appearance structure are subject to change due to technological innovation and improvement without prior notice;
Due to reasons such as shooting, typesetting, printing, etc., there will be slight differences between the product images and the actual products.

Distribuída no Brasil pela LRI | vendas@lri.com.br | 51 2129-3000

ENMG 恩爵

Started in 2012, exploring the frontier, leading innovation, self-transformation, the world of ideas.

始于2012年，探索前沿 、 创新引领 、 自我蜕变 、 理念世界。

ENMG INTELLIGENT TECHNOLOGY

恩爵ENMG智能科技

Zhejiang ENMG Intelligent Technology Co., Ltd.

浙江恩爵智能科技有限公司

Wenzhou Yuanzhang Electric Co., Ltd.

温州元璋电气有限公司

公司地址 Address： 浙江省乐清市柳市镇柳江路3788号

联系方式 Telephones： 400-996-2708

官方网站 Website： www.enjue.cc

迪威模型 3D Model： www.3dwhere.com/user/135269

微信公众号
WeChat Public

微信客服
WeChat Clientele Services

入驻平台 ENTRY PLATFORM

在线搜索“恩爵旗舰店”，线上下单实惠方便!

Search for “ENMG Flagship Store” online, ordering online is affordable and convenient !

天猫 Tmall　淘宝 Taobao　1688　京东 JD　拼多多 PDD　抖音 TikTok　速卖通 AliExpress

Distribuída no Brasil pela LRI | vendas@lri.com.br | 51 2129-3000