Peltier Thermoelectric Effect Refrigerator

Semiconductor Cold Plate Module

Speed Cooling Platform | Low noise | Eco-friendly



Cools quickly

Developed based on the Peltier effect, it provides a dedicated cooling solution.

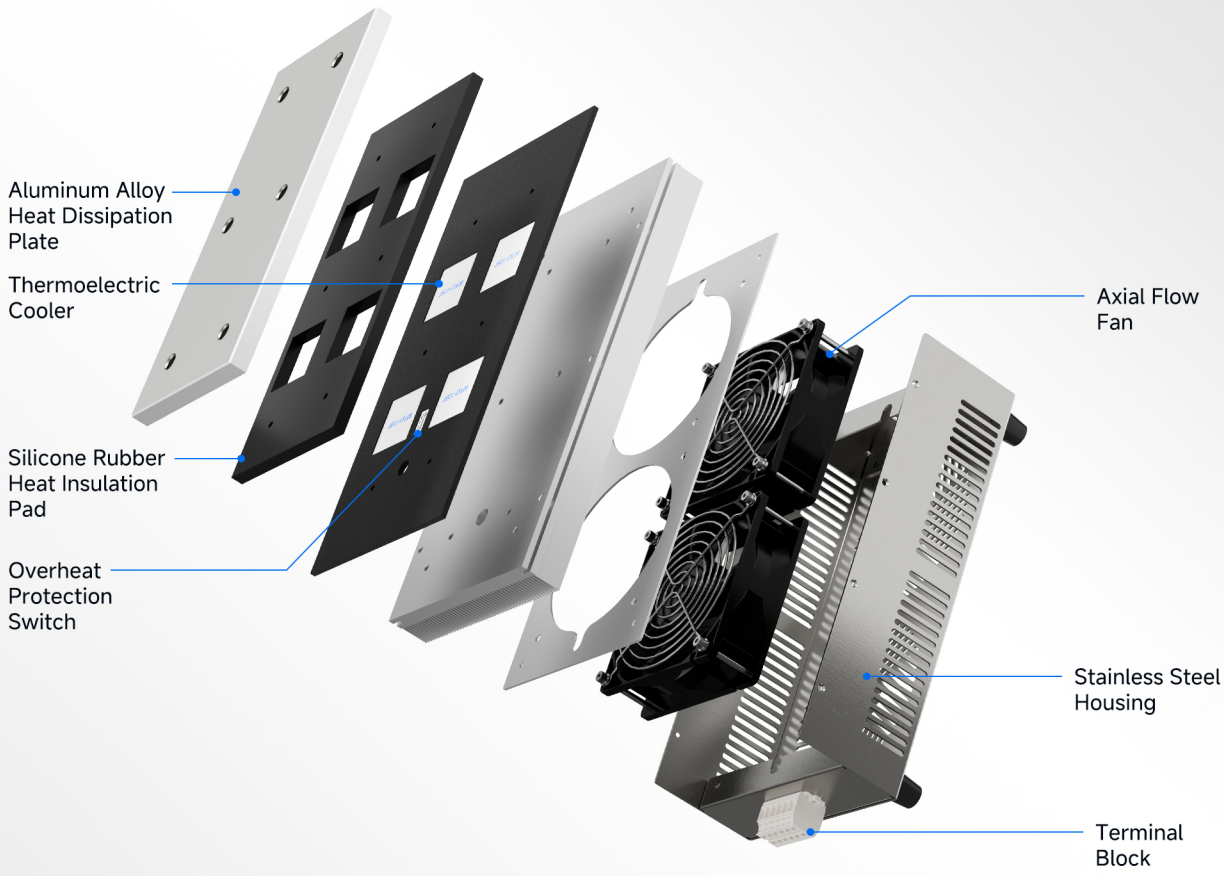

TEC Semiconductor

Rapid Cooling and Stable.



Axial Fan

High Rotational Speed
High Airflow
Low Noise



Built-in NTC Thermistor

Temperature Control

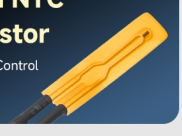

SUS304 Stainless Steel Body

The metal material is solid, and the structural strength is doubled.

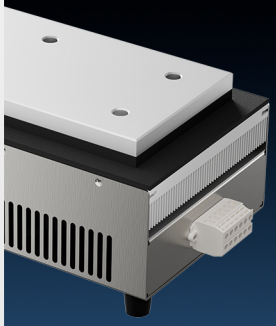

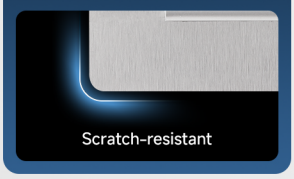

High-Multiple Gear Aluminum Alloy Heat Sink

CNC Precision Machining Surface Anodization.The heat dissipation efficiency and service life are significantly improved.

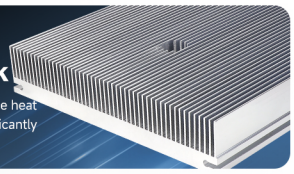

Thickened Heat Insulation Pad

Buffer Protection

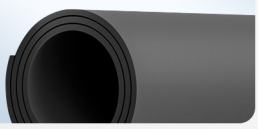

High Thermal Conductivity Aluminum Plate

Refrigeration efficiency is improved.

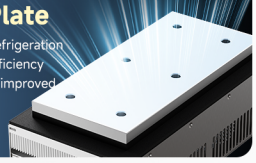

Cage Clamp Terminal

Easy wiring



Overheat Protection

Built-in Snap Action Thermal Protection Switch



* Product features and appearance structure are subject to change due to technological innovation and improvement without prior notice;
Due to reasons such as shooting, typesetting, printing, etc., there will be slight differences between the product images and the actual products.

Distribuída no Brasil pela LRI | vendas@lri.com.br | 51 2129-3000

Dry > Water Droplet > Frosting
Power on for 10 min
Before and After Changes



Cooling Effect Exceeds Expectations

The test data applies to specifications of 106W and above; 75W spec: lower temp ref by ~5°C (Recommended).

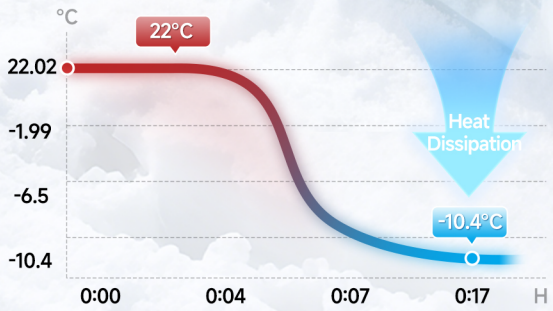

Rapid Cooling

The aluminum plate with high thermal conductivity effectively enhances the refrigeration efficiency.

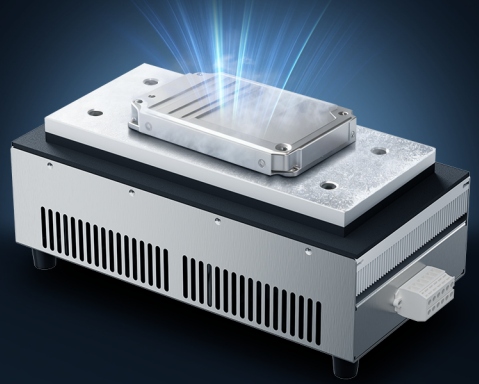

* Product features and appearance structure are subject to change due to technological innovation and improvement without prior notice;
Due to reasons such as shooting, typesetting, printing, etc., there will be slight differences between the product images and the actual products.

Distribuída no Brasil pela LRI | vendas@lri.com.br | 51 2129-3000

Three Refrigeration Schemes

The generated cooling capacity and heat are transferred to the surrounding environment through the cold-side radiator & fan and the hot-side radiator & fan respectively.The cold-side radiator and cold-side fan form an internal circulation system to cool the enclosed space;the hot-side radiator and hot-side fan form an external circulation system, which is used to discharge heat to the external environment.Replace it directly with: "The generated heat is transferred to the surrounding environment through the hot-side radiator and fan.The generated cooling capacity is directly transferred to the cold plate, causing the cold plate to cool down rapidly."

DA Direct to Air

Cold-end precision Al plate close fit: direct heat transfer for fast cooling



LA Liquid to Air

Through the circulating liquid system,Flows through the cold-end heat sink (precision-machined aluminum plate).Cool the liquid down.



AA Air-to-Air

Through the cold-end heat sink and fan,circulate cold air in a confined space to achieve cooling.



Intelligent Temperature Controller

Recommended for use with a temperature controller

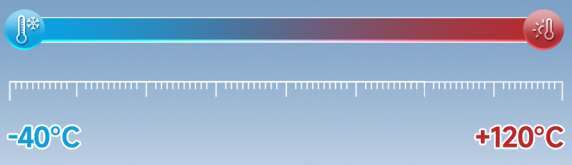



Automatic Switching
Refrigeration、Heating、Start/Stop

Temperature Control
-40°C ~ +120°C，Precision 0.1°C

Two Mounting Options
External independent unit, customizable for cooler surface mounting

Fault Alarm
Guard Equipment Safety

Fan Delay Shut-Down
Prevent Condensation Caused by Temperature Difference

RS485 Communication
Data Acquisition and Remote Control

Cooling Scenarios


High-power Laser

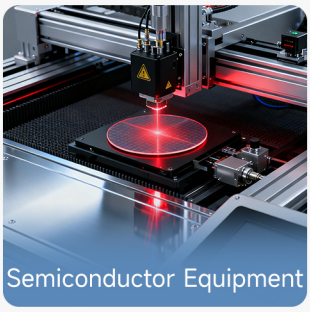
Semiconductor Equipment


Medical Equipment


Metal Welding

* Product features and appearance structure are subject to change due to technological innovation and improvement without prior notice;
Due to reasons such as shooting, typesetting, printing, etc., there will be slight differences between the product images and the actual products.

LRI Distribuída no Brasil pela LRI | vendas@lri.com.br | 51 2129-3000

Specification

Model Description

The design of product models and ordering codes is intended to cover all possible specifications of this series of products, and they cannot be combined arbitrarily.If you have any questions during the first selection, please contact the technical service engineers for confirmation.If the technical specifications in the product library cannot meet your needs, customization is available! Items marked with * are customized products.

HET | D | - | 101 | | - | 053 | 12VDC

① ② ③ ④ ⑤ ⑥

① Product Name

Code	Interpretation
HET	Peltier effect Semiconductor Cooler

② Type

Code	Interpretation
A	(Air to Air) Thermoelectric Air Conditioners
L	*(Liquid to Air) Liquid Chillers
D	*(Direct to Air) Cold Plates
U	*(Direct to Liquid) Ultra - low temperature cold plates
X	*(Liquid to Liquid) Liquid Chillers

③ Specifications of Hot-Side Heat Sink

Code	Interpretation
101	W100×L150mm
102	W100×L215mm
151	W150×L200mm
152	W150×L300mm
153	W150×L400mm
154	W300×L300mm
156	W300×L400mm

④ Installation Method

Code	Interpretation
T	Wall-penetrating Installation (Basic Type)
TS	Wall-penetrating Installation (Enhanced, Hot Side Protection)
TP	Wall-penetrating Installation (Integrated Protection Type)
F	*Surface-exposed External Installation
H	*Flush-mount Recessed Installation
None	Flat Static Placement (Tabletop Type)

⑤ Maximum Cooling Capacity(W)

053	106	212	424
062	124	248	496
075	150	300	600
080	160	320	640
088	176	352	704
097	194	388	776
106	212	424	848
133	266	532	1064

⑥ Rated Voltage

12VDC	24VDC	48VDC	100~240VAC

HETD-101-075 12VDC



Basic Parameters

Cooling Method : Direct to Air	Temperature Control Device : Optional
Cooling Capacity : Max.75W	Weight : /
Power Consumption : Max.102W	Noise : 39dB(A)
Rated Voltage : DC12V	Operating Temperature : -20~70°C
Cooling Current : Starting 8.5A Stable 7A	Protection Level : IP65

Overall Dimensions

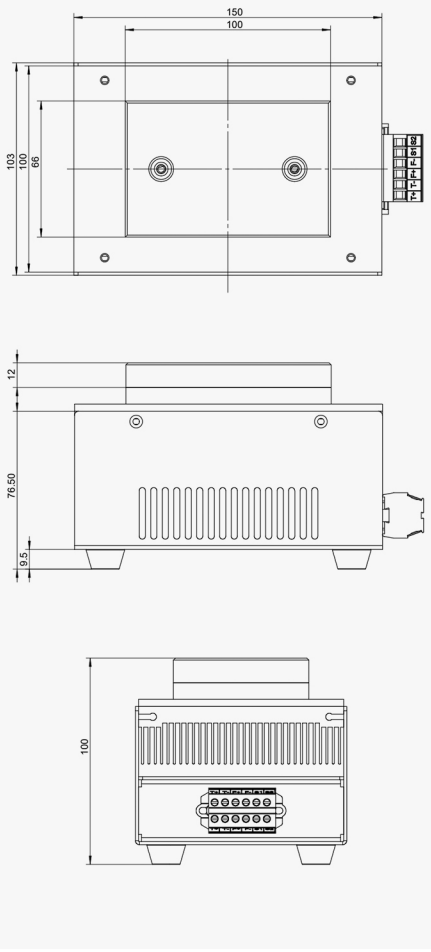

*Unit: mm, Dimension data may have deviations; please refer to the actual product for accuracy.

* Product features and appearance structure are subject to change due to technological innovation and improvement without prior notice;
Due to reasons such as shooting, typesetting, printing, etc., there will be slight differences between the product images and the actual products.

Distribuída no Brasil pela LRI | vendas@lri.com.br | 51 2129-3000

HETD-151-106 24VDC



Basic Parameters

Cooling Method : Direct to Air	Temperature Control Device : Optional
Cooling Capacity : Max.106W	Weight : /
Power Consumption : Max.144W	Noise : 43dB(A)
Rated Voltage : DC24V	Operating Temperature : -20~70°C
Cooling Current : Starting 6A Stable 4.8A	Protection Level : IP65

Overall Dimensions

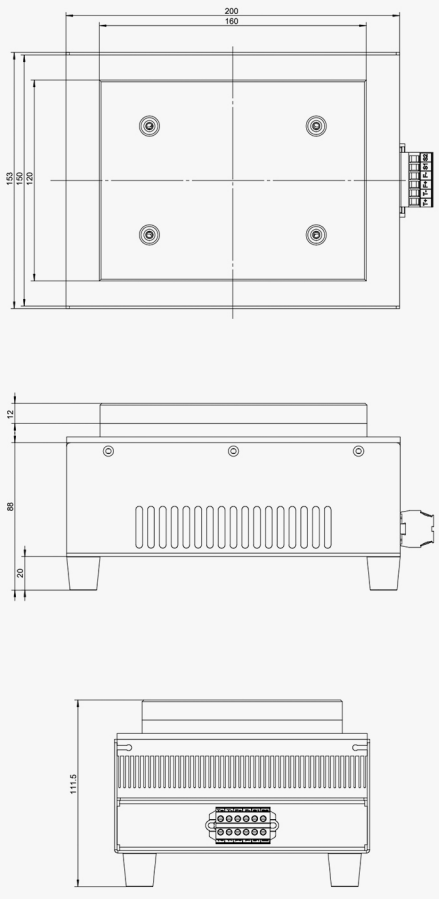

*Unit: mm, Dimension data may have deviations; please refer to the actual product for accuracy.

HETD-102-150 24VDC



Basic Parameters

Cooling Method : Direct to Air	Temperature Control Device : Optional
Cooling Capacity : Max.150W	Weight : /
Power Consumption : Max.204W	Noise : 39dB(A)
Rated Voltage : DC24V	Operating Temperature : -20~70°C
Cooling Current : Starting 8.5A Stable 7A	Protection Level : IP65

Overall Dimensions

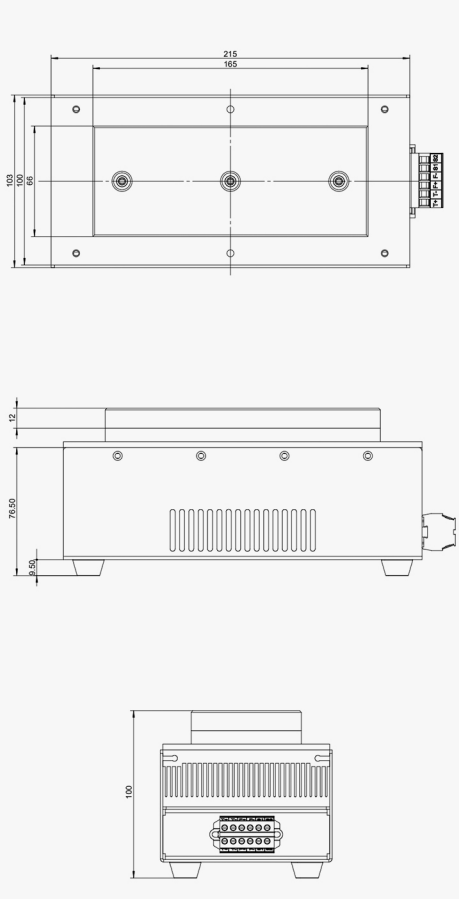

*Unit: mm, Dimension data may have deviations; please refer to the actual product for accuracy.

* Product features and appearance structure are subject to change due to technological innovation and improvement without prior notice;
Due to reasons such as shooting, typesetting, printing, etc., there will be slight differences between the product images and the actual products.

LRI Distribuída no Brasil pela LRI | vendas@lri.com.br | 51 2129-3000

HETD-152-212 48VDC



Basic Parameters

Cooling Method : Direct to Air	Temperature Control Device : Optional
Cooling Capacity : Max.212W	Weight : /
Power Consumption : Max.288W	Noise : 50dB(A)
Rated Voltage : DC48V	Operating Temperature : -20~70°C
Cooling Current : Starting 6A Stable 4.8A	Protection Level : IP65

Overall Dimensions

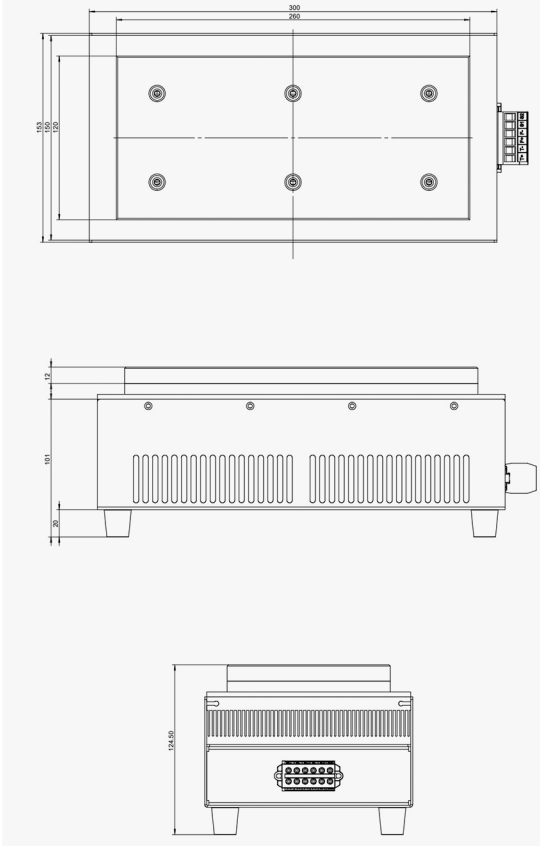

*Unit: mm, Dimension data may have deviations; please refer to the actual product for accuracy.

HETD-153-300 48VDC



Basic Parameters

Cooling Method : Direct to Air	Temperature Control Device : Optional
Cooling Capacity : Max.300W	Weight : /
Power Consumption : Max.408W	Noise : 50dB(A)
Rated Voltage : DC48V	Operating Temperature : -20~70°C
Cooling Current : Starting 8.5A Stable 7A	Protection Level : IP65

Overall Dimensions

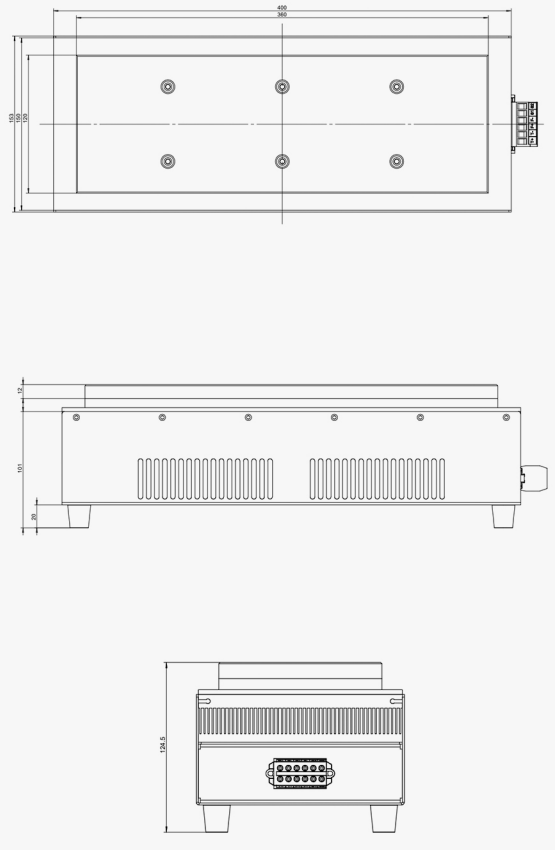

*Unit: mm, Dimension data may have deviations; please refer to the actual product for accuracy.

* Product features and appearance structure are subject to change due to technological innovation and improvement without prior notice;
Due to reasons such as shooting, typesetting, printing, etc., there will be slight differences between the product images and the actual products.

Distribuída no Brasil pela LRI | vendas@lri.com.br | 51 2129-3000

HETD-154-424 48VDC



Basic Parameters

Cooling Method : Direct to Air	Temperature Control Device : Optional
Cooling Capacity : Max.424W	Weight : /
Power Consumption : Max.576W	Noise : 53dB(A)
Rated Voltage : DC48V	Operating Temperature : -20~70°C
Cooling Current : Starting 12A Stable 9.6A	Protection Level : IP65

Overall Dimensions

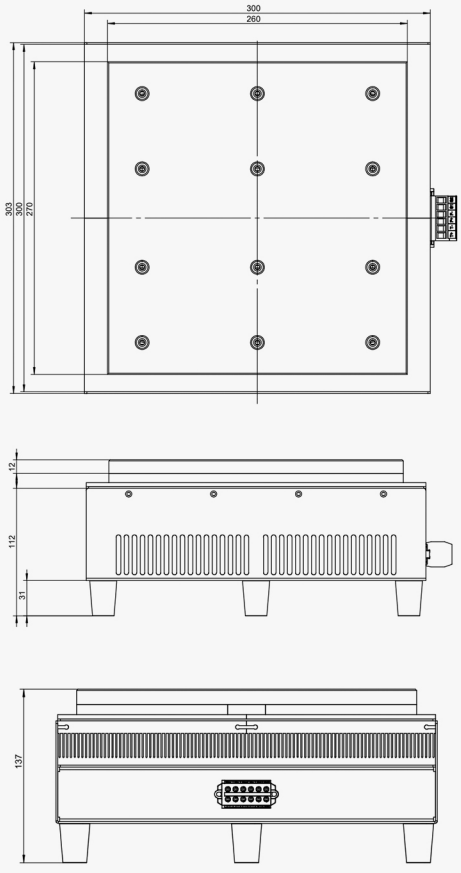

*Unit: mm, Dimension data may have deviations; please refer to the actual product for accuracy.

HETD-156-600 48VDC



Basic Parameters

Cooling Method : Direct to Air	Temperature Control Device : Optional
Cooling Capacity : Max.600W	Weight : /
Power Consumption : Max.816W	Noise : 53dB(A)
Rated Voltage : DC48V	Operating Temperature : -20~70°C
Cooling Current : Starting 17A Stable 14A	Protection Level : IP65

Overall Dimensions

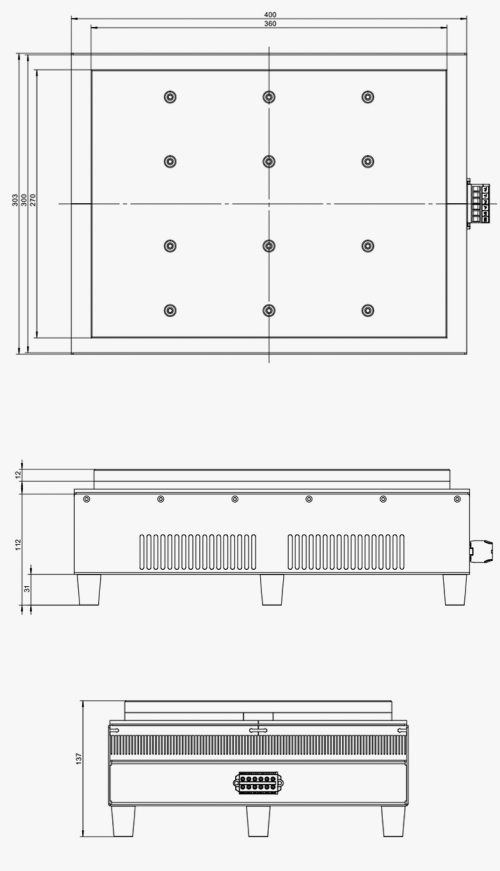

*Unit: mm, Dimension data may have deviations; please refer to the actual product for accuracy.

* Product features and appearance structure are subject to change due to technological innovation and improvement without prior notice;
Due to reasons such as shooting, typesetting, printing, etc., there will be slight differences between the product images and the actual products.

LRI Distribuída no Brasil pela LRI | vendas@lri.com.br | 51 2129-3000

Terminal Description and Wiring

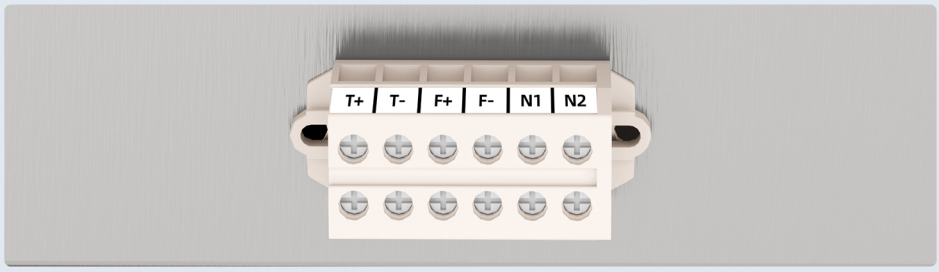

- T+: Power Supply Terminal +
- T-: Power Supply Terminal -
- F+: Fan Power Supply Terminal +
- F-: Fan Power Supply Terminal -
- N1、N2: NTC Thermistor Signal Output Terminal
  1.Connect to the thermostat to realize temperature detection of the cooling plate
  2.Thermistor B-Value: 3950K ,
  Resistance Value: 10kΩ

Refrigerator Wiring Diagram

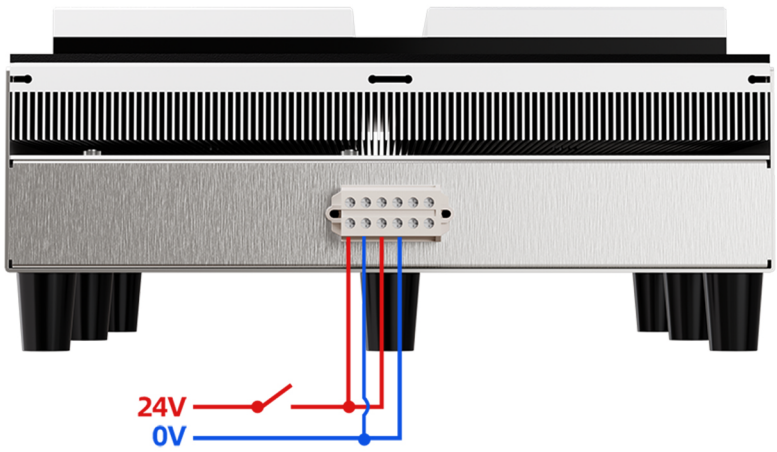

Refrigerator+Thermostat+Power Supply Wiring Diagram

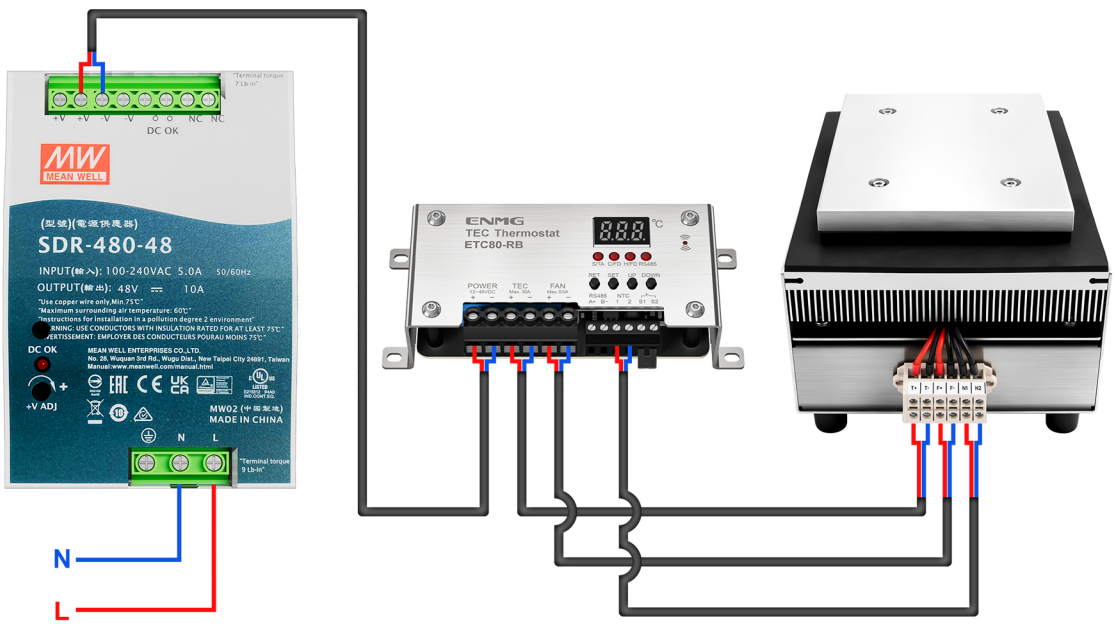

* Product features and appearance structure are subject to change due to technological innovation and improvement without prior notice;
Due to reasons such as shooting, typesetting, printing, etc., there will be slight differences between the product images and the actual products.

Distribuída no Brasil pela LRI | vendas@lri.com.br | 51 2129-3000

ENMG 恩爵

Started in 2012, exploring the frontier, leading innovation, self-transformation, the world of ideas.

始于2012年，探索前沿 、 创新引领 、 自我蜕变 、 理念世界。

ENMG INTELLIGENT TECHNOLOGY

恩爵ENMG智能科技

Zhejiang ENMG Intelligent Technology Co., Ltd.

浙江恩爵智能科技有限公司

Wenzhou Yuanzhang Electric Co., Ltd.

温州元璋电气有限公司

公司地址 Address： 浙江省乐清市柳市镇柳江路3788号

联系方式 Telephones： 400-996-2708

官方网站 Website： www.enjue.cc

迪威模型 3D Model： www.3dwhere.com/user/135269

微信公众号
WeChat Public

微信客服
WeChat Clientele Services

入驻平台 ENTRY PLATFORM

在线搜索“恩爵旗舰店”，线上下单实惠方便!

Search for “ENMG Flagship Store” online, ordering online is affordable and convenient !

天猫 Tmall　淘宝 Taobao　1688　京东 JD　拼多多 PDD　抖音 TikTok　速卖通 AliExpress

Distribuída no Brasil pela LRI | vendas@lri.com.br | 51 2129-3000