Peltier Thermoelectric Effect

Liquid Cooling Module

M-type Runner | Compact | Eco-friendly



Semiconductor Refrigeration

The liquid is rapidly cooled after passing through the refrigeration plate;
the exchanged heat is discharged through fan convection;
and liquid cooling is ultimately achieved.

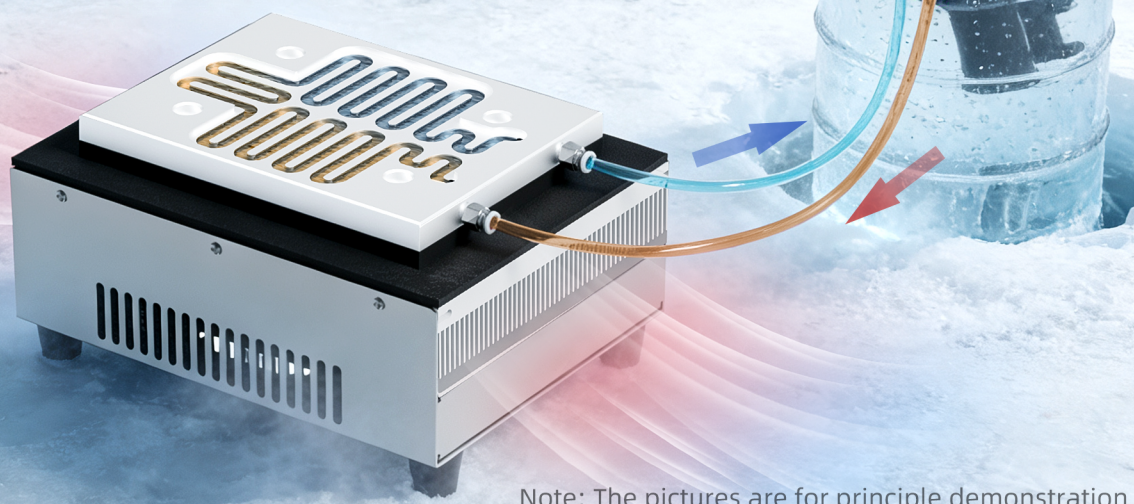

Note: The pictures are for principle demonstration only.
This product does not include water pipes or water pumps.

Ultra-fast Liquid Cooling

Semiconductor Refrigeration

Safe, rapid cooling, and long service life



Upgrade Cooling Aluminum Plate

One-piece Molding
No Welding, No Leakage

M-type Diversion
Increase the Contact Area

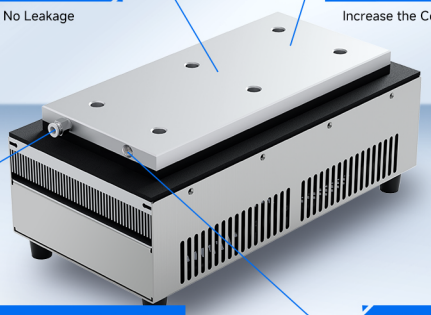

8mm Leak-proof Interface
Easy to Connect

G1/8 Thread
Compatible with Other Interfaces

Radiator

CNC Precision-machined Aluminum Alloy

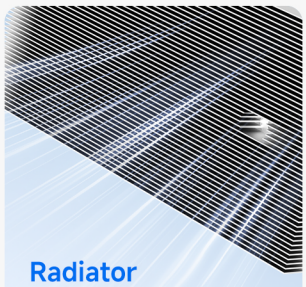

Insulation Cotton

Prevent mutual heat influence between the hot and cold ends

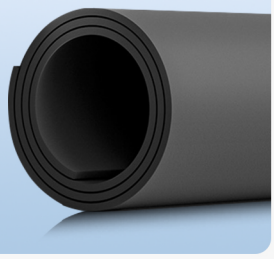

Low-Noise Fan

Only Sound Source: Cooling Module



Built-in NTC Thermistor

Control the temperature of the circulating liquid by measuring and controlling the temperature of the cooling plate

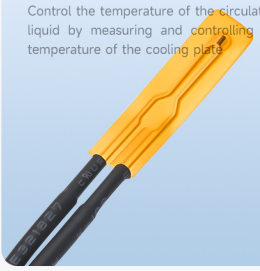

* Product features and appearance structure are subject to change due to technological innovation and improvement without prior notice;
Due to reasons such as shooting, typesetting, printing, etc., there will be slight differences between the product images and the actual products.

Distribuída no Brasil pela LRI | vendas@lri.com.br | 51 2129-3000

Authentic Record, Power-on for only 15 min Liquid Temperature Reduced by 8°C

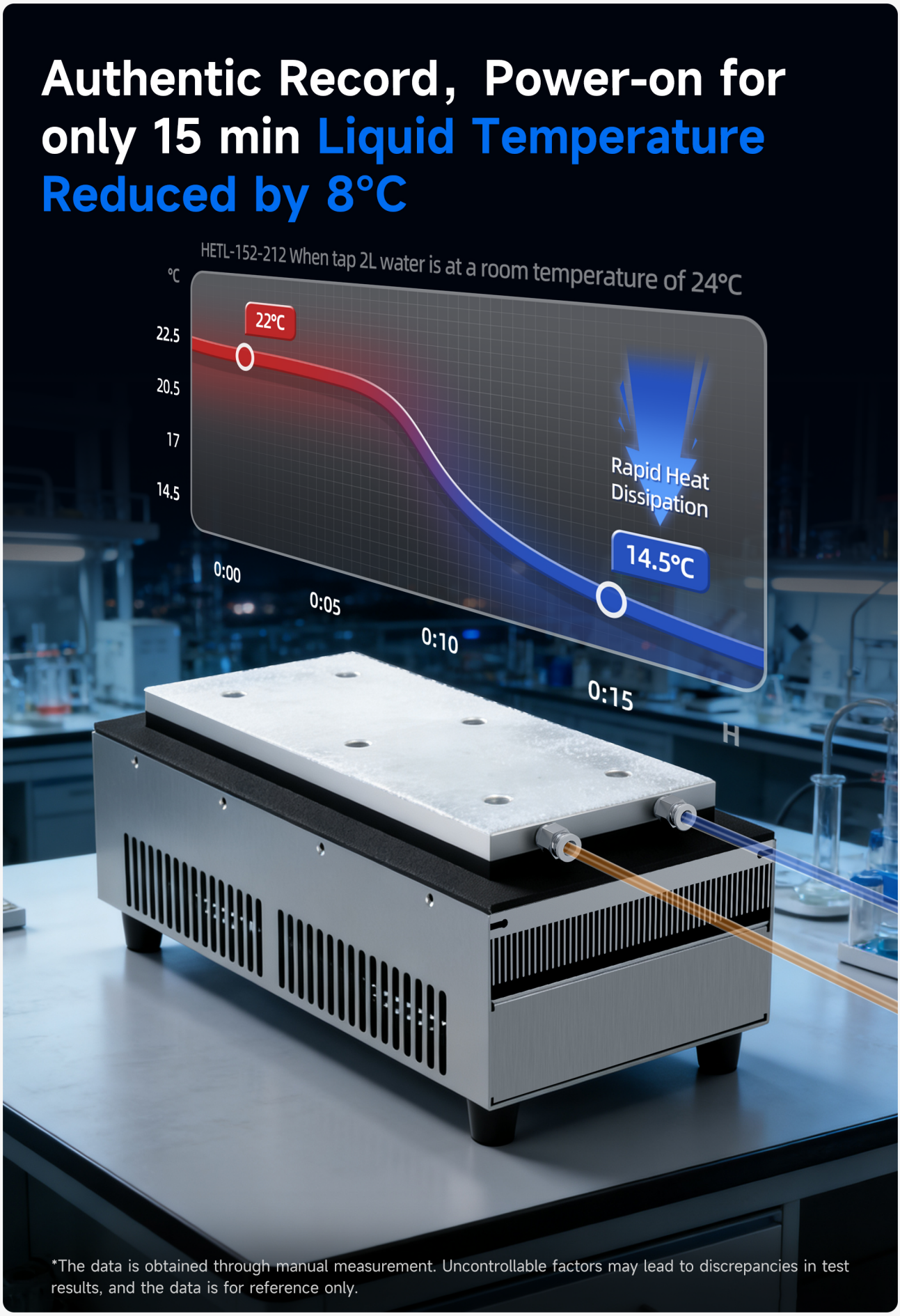

*The data is obtained through manual measurement. Uncontrollable factors may lead to discrepancies in test results, and the data is for reference only.

* Product features and appearance structure are subject to change due to technological innovation and improvement without prior notice;
Due to reasons such as shooting, typesetting, printing, etc., there will be slight differences between the product images and the actual products.

Distribuída no Brasil pela LRI | vendas@lri.com.br | 51 2129-3000

Three Refrigeration Schemes

When the liquid cooling module is powered on, one side of the semiconductor chilling plate cools and the other heats up. The heat is dissipated through the hot-side heat sink and fan, and the cooling capacity is transferred to the precision-machined aluminum plate with an M-shaped flow channel, which cools the liquid through continuous heat exchange.

LA Liquid to Air

Through the circulating liquid system,Flows through the cold-end heat sink (precision-machined aluminum plate). Cool the liquid down.



DA Direct to Air

It achieves rapid cooling of the equipment through direct heat conduction and exchange by closely attaching to the high thermal conductivity precision - processed aluminum plate at the cold end.



AA Air to Air

It achieves cooling by circulating cold air in a confined space through the cold-end heat sink and fan.



Temperature Controller

Recommended use with a thermostat for unattended automatic start and stop.



Automatic Switching
Cooling, heating, start and stop

Temperature Control
-40°C ~ +120°C, Accuracy 0.1°C

Installation Methods
External, independent, customizable for surface mounting

Fault Alarm
Equipment Safety

Fan Delay Shutdown
Prevent temperature difference condensation

RS485 Communication
Temperature data collection and remote control

Cooling Scenarios

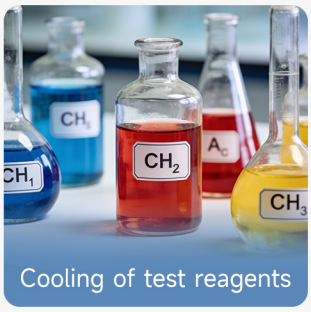

Cooling of test reagents


Air conditioning clothing


Water-cooled fish tank


Metal processing and welding

* Product features and appearance structure are subject to change due to technological innovation and improvement without prior notice;
Due to reasons such as shooting, typesetting, printing, etc., there will be slight differences between the product images and the actual products.

Distribuída no Brasil pela LRI | vendas@lri.com.br | 51 2129-3000

Specification

Model Description

The design of product models and ordering codes is intended to cover all possible specifications of this series of products, and they cannot be combined arbitrarily.If you have any questions during the first selection, please contact the technical service engineers for confirmation.If the technical specifications in the product library cannot meet your needs, customization is available! Items marked with * are customized products.

HET	L	-	101		-	053	12VDC
①	②		③	④		⑤	⑥

① Product Name

Code	Interpretation
HET	Peltier effect Semiconductor Cooler

② Type

Code	Interpretation
A	(Air to Air) Thermoelectric Air Conditioners
L	*(Liquid to Air) Liquid Chillers
D	*(Direct to Air) Cold Plates
U	*(Direct to Liquid) Ultra - low temperature cold plates
X	*(Liquid to Liquid) Liquid Chillers

③ Specifications of Hot-Side Heat Sink

Code	Interpretation
101	W100×L150mm
102	W100×L215mm
151	W150×L200mm
152	W150×L300mm
153	W150×L400mm
154	W300×L300mm
156	W300×L400mm

④ Installation Method

Code	Interpretation
T	Wall-penetrating Installation (Basic Type)
TS	Wall-penetrating Installation (Enhanced, Hot Side Protection)
TP	Wall-penetrating Installation (Integrated Protection Type)
F	*Surface-exposed External Installation
H	*Flush-mount Recessed Installation
None	Flat Static Placement (Tabletop Type)

⑤ Maximum Cooling Capacity(W)

053	106	212	424
062	124	248	496
075	150	300	600
080	160	320	640
088	176	352	704
097	194	388	776
106	212	424	848
133	266	532	1064

⑥ Rated Voltage

12VDC	24VDC	48VDC	100~240VAC

HETL-101-075 12VDC



Basic Parameters

Cooling Method : Liquid to Air	Temperature Control Device : Optional
Cooling Capacity : Max.75W	Joint Specification : ID 8mm, Thread G1/8
Power Consumption : Max.102W	Noise : 39dB(A)
Rated Voltage : DC12V	Operating Temperature : -20~70°C
Cooling Current : Starting 8.5A Stable 7A	IP Rating : IP65

Overall Dimensions

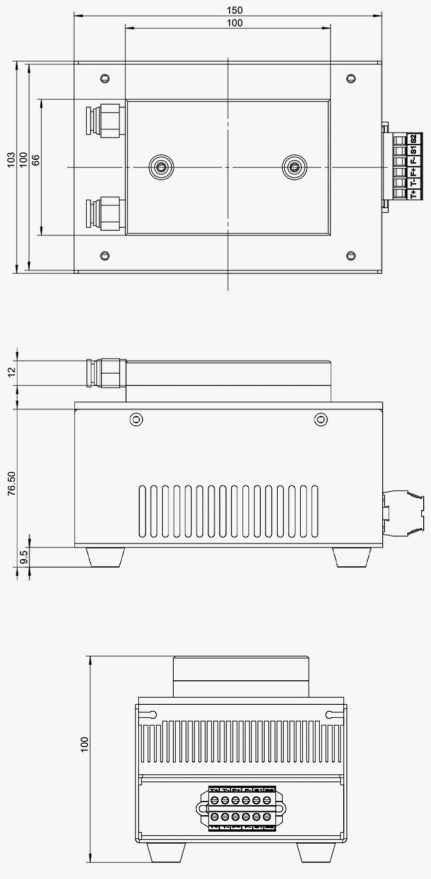

*Unit: mm, Dimension data may have deviations; please refer to the actual product for accuracy.

* Product features and appearance structure are subject to change due to technological innovation and improvement without prior notice;
Due to reasons such as shooting, typesetting, printing, etc., there will be slight differences between the product images and the actual products.

Distribuída no Brasil pela LRI | vendas@lri.com.br | 51 2129-3000

HETL-151-106 24VDC



Basic Parameters

Cooling Method : Liquid to Air	Temperature Control Device : Optional
Cooling Capacity : Max.106W	Joint Specification : ID 8mm, Thread G1/8
Power Consumption : Max.144W	Noise : 43dB(A)
Rated Voltage : DC24V	Operating Temperature : -20~70°C
Cooling Current : Starting 6A Stable 4.8A	IP Rating : IP65

Overall Dimensions

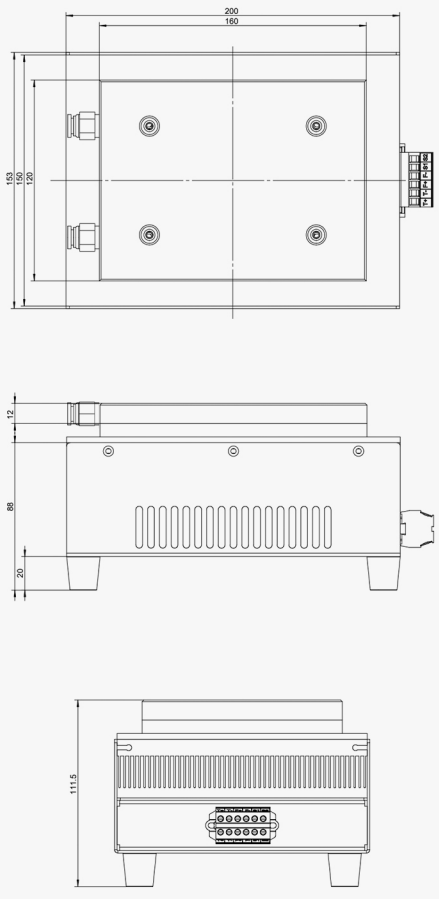

*Unit: mm, Dimension data may have deviations; please refer to the actual product for accuracy.

HETL-102-150 24VDC



Basic Parameters

Cooling Method : Liquid to Air	Temperature Control Device : Optional
Cooling Capacity : Max.150W	Joint Specification : ID 8mm, Thread G1/8
Power Consumption : Max.204W	Noise : 39dB(A)
Rated Voltage : DC24V	Operating Temperature : -20~70°C
Cooling Current : Starting 8.5A Stable 7A	IP Rating : IP65

Overall Dimensions

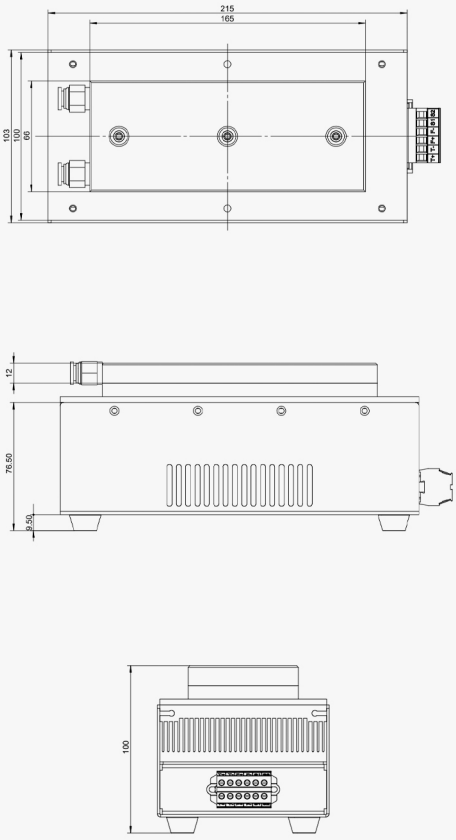

*Unit: mm, Dimension data may have deviations; please refer to the actual product for accuracy.

* Product features and appearance structure are subject to change due to technological innovation and improvement without prior notice;
Due to reasons such as shooting, typesetting, printing, etc., there will be slight differences between the product images and the actual products.

LRI Distribuída no Brasil pela LRI | vendas@lri.com.br | 51 2129-3000

HETL-152-212 48VDC



Basic Parameters

Cooling Method : Liquid to Air	Temperature Control Device : Optional
Cooling Capacity : Max.212W	Joint Specification : ID 8mm, Thread G1/8
Power Consumption : Max.288W	Noise : 50dB(A)
Rated Voltage : DC48V	Operating Temperature : -20~70°C
Cooling Current : Starting 6A Stable 4.8A	IP Rating : IP65

Overall Dimensions

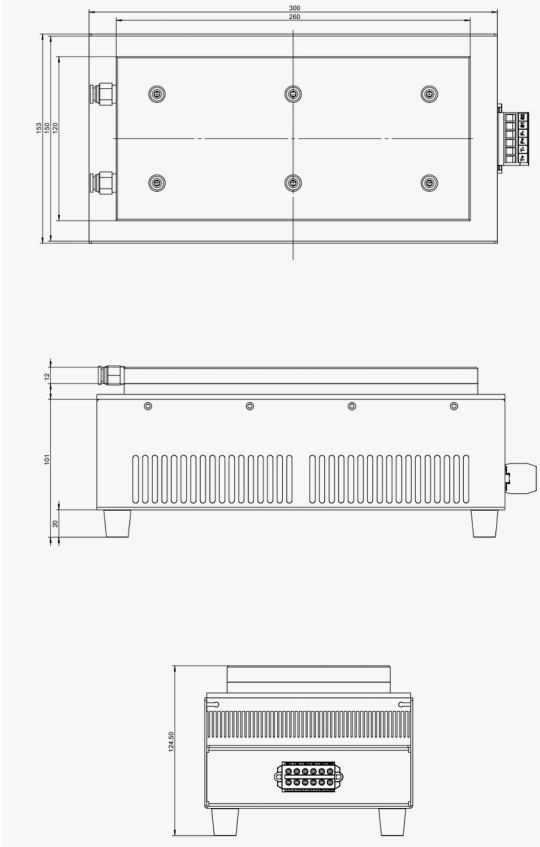

*Unit: mm, Dimension data may have deviations; please refer to the actual product for accuracy.

HETL-153-300 48VDC



Basic Parameters

Cooling Method : Liquid to Air	Temperature Control Device : Optional
Cooling Capacity : Max.300W	Joint Specification : ID 8mm, Thread G1/8
Power Consumption : Max.408W	Noise : 50dB(A)
Rated Voltage : DC48V	Operating Temperature : -20~70°C
Cooling Current : Starting 8.5A Stable 7A	IP Rating : IP65

Overall Dimensions

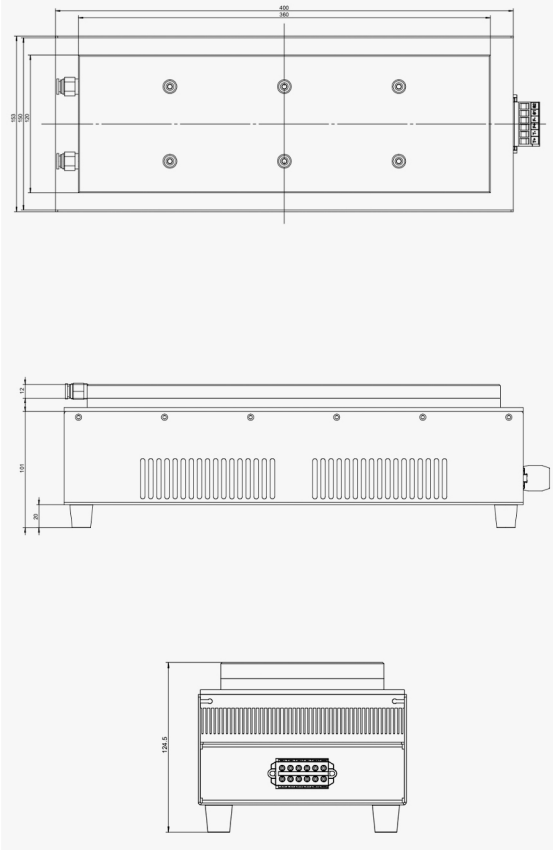

*Unit: mm, Dimension data may have deviations; please refer to the actual product for accuracy.

* Product features and appearance structure are subject to change due to technological innovation and improvement without prior notice;
Due to reasons such as shooting, typesetting, printing, etc., there will be slight differences between the product images and the actual products.

Distribuída no Brasil pela LRI | vendas@lri.com.br | 51 2129-3000

HETL-154-424 48VDC



Basic Parameters

Cooling Method : Liquid to Air	Temperature Control Device : Optional
Cooling Capacity : Max.424W	Joint Specification : ID 8mm, Thread G1/8
Power Consumption : Max.576W	Noise : 53dB(A)
Rated Voltage : DC48V	Operating Temperature : -20~70°C
Cooling Current : Starting 12A Stable 9.6A	IP Rating : IP65

Overall Dimensions

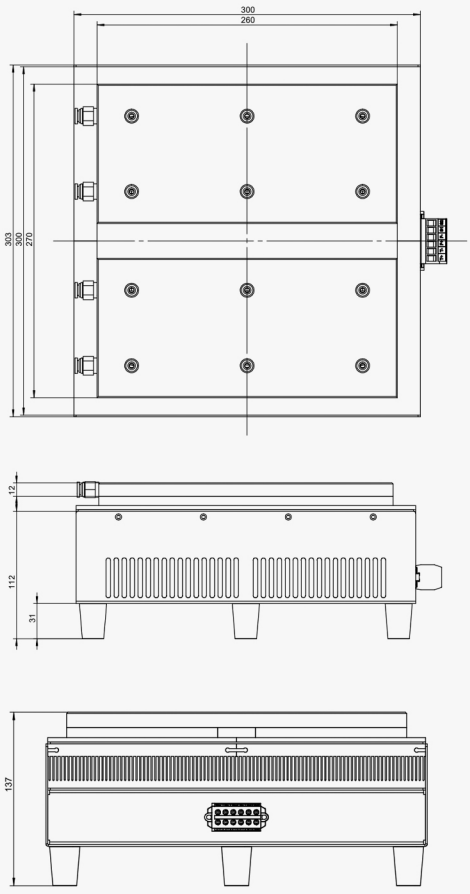

*Unit: mm, Dimension data may have deviations; please refer to the actual product for accuracy.

HETL-156-600 48VDC



Basic Parameters

Cooling Method : Liquid to Air	Temperature Control Device : Optional
Cooling Capacity : Max.600W	Joint Specification : ID 8mm, Thread G1/8
Power Consumption : Max.816W	Noise : 53dB(A)
Rated Voltage : DC48V	Operating Temperature : -20~70°C
Cooling Current : Starting 17A Stable 14A	IP Rating : IP65

Overall Dimensions

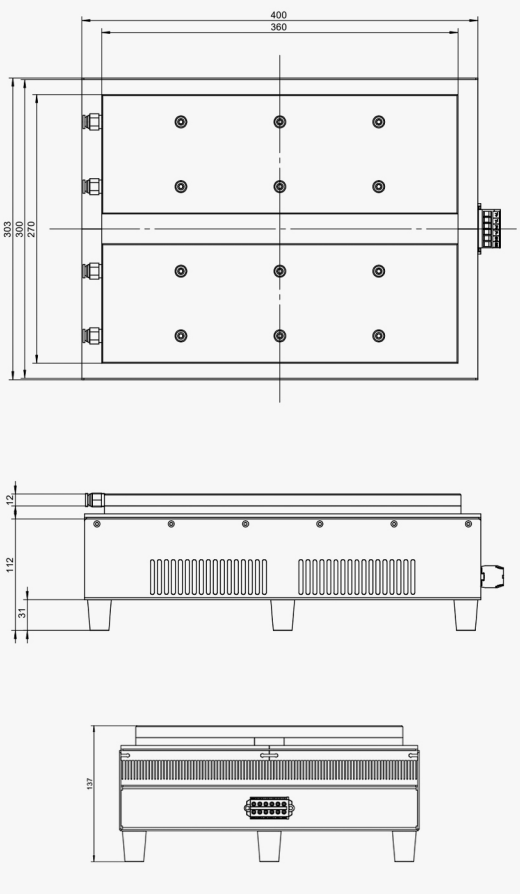

*Unit: mm, Dimension data may have deviations; please refer to the actual product for accuracy.

* Product features and appearance structure are subject to change due to technological innovation and improvement without prior notice;
Due to reasons such as shooting, typesetting, printing, etc., there will be slight differences between the product images and the actual products.

Distribuída no Brasil pela LRI | vendas@lri.com.br | 51 2129-3000

Terminal Description and Wiring

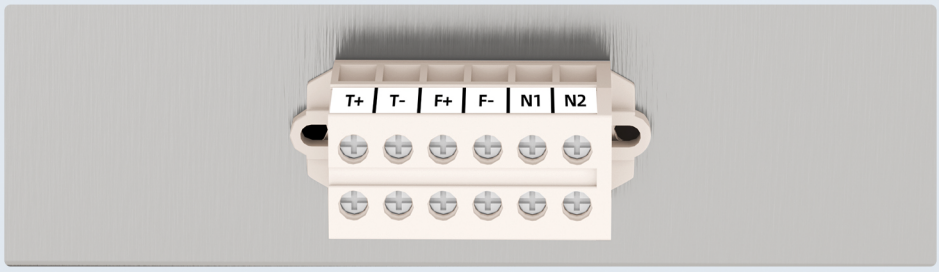

- T+: Power Supply Terminal +
- T-: Power Supply Terminal -
- F+: Fan Power Supply Terminal +
- F-: Fan Power Supply Terminal -
- N1、N2: NTC Thermistor Signal Output Terminal
  1.Connect to the thermostat to realize temperature detection of the cooling plate
  2.Thermistor B-Value: 3950K ,
  Resistance Value: 10kΩ

Refrigerator Wiring Diagram

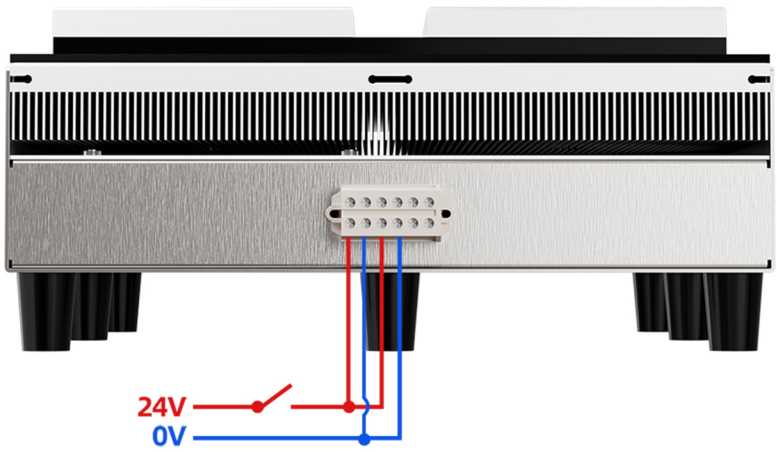

Refrigerator+Thermostat+Power Supply Wiring Diagram

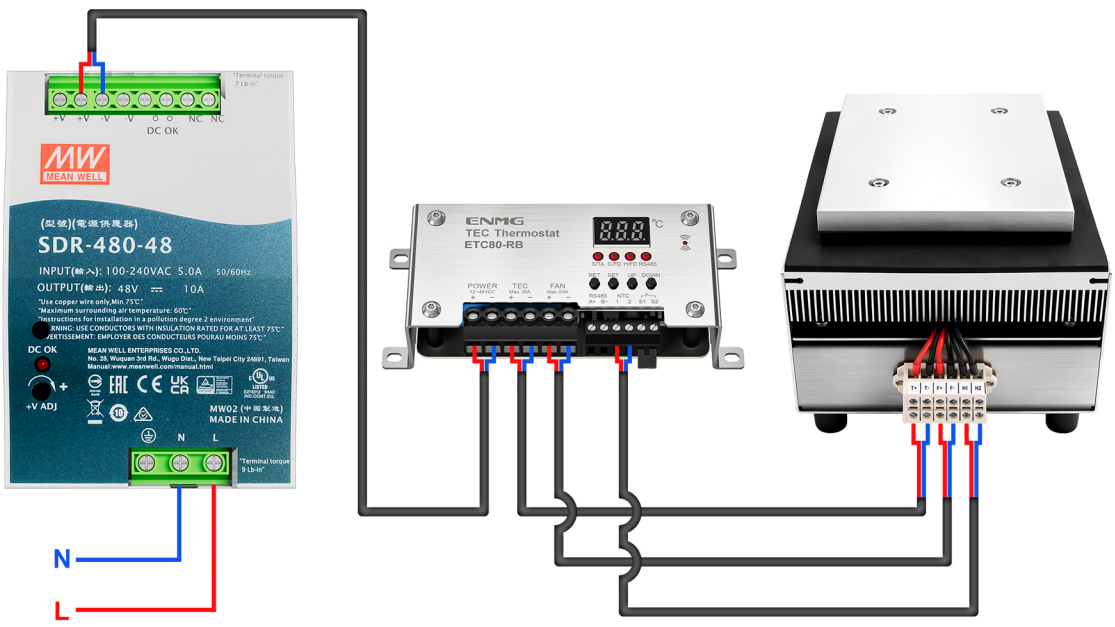

* Product features and appearance structure are subject to change due to technological innovation and improvement without prior notice;
Due to reasons such as shooting, typesetting, printing, etc., there will be slight differences between the product images and the actual products.

Distribuída no Brasil pela LRI | vendas@lri.com.br | 51 2129-3000

ENMG 恩爵

Started in 2012, exploring the frontier, leading innovation, self-transformation, the world of ideas.

始于2012年，探索前沿 、 创新引领 、 自我蜕变 、 理念世界。

ENMG INTELLIGENT TECHNOLOGY

恩爵ENMG智能科技

Zhejiang ENMG Intelligent Technology Co., Ltd.

浙江恩爵智能科技有限公司

Wenzhou Yuanzhang Electric Co., Ltd.

温州元璋电气有限公司

公司地址 Address： 浙江省乐清市柳市镇柳江路3788号

联系方式 Telephones： 400-996-2708

官方网站 Website： www.enjue.cc

迪威模型 3D Model： www.3dwhere.com/user/135269

微信公众号
WeChat Public

微信客服
WeChat Clientele Services

入驻平台 ENTRY PLATFORM

在线搜索“恩爵旗舰店”，线上下单实惠方便!

Search for “ENMG Flagship Store” online, ordering online is affordable and convenient !

天猫 Tmall　淘宝 Taobao　1688　京东 JD　拼多多 PDD　抖音 TikTok　速卖通 AliExpress

Distribuída no Brasil pela LRI | vendas@lri.com.br | 51 2129-3000