Imported Hamlin Reed Switch

Liquid Level Float Switch

The switch signal is triggered by the movement of the magnetic float



LRI Distribuída no Brasil pela LRI | vendas@lri.com.br | 51 2129-3000

Imported Hamlin Reed Switch

More Stable Performance
Longer Service Life



120℃ High Temperature Resistant | **400mm** Total Cable Length

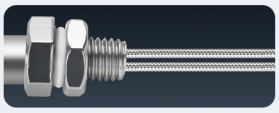

Single Float→Mesh Braided Wire



Dual Floats→PTFE Wire

Epoxy Resin Adhesive

Insulating and Waterproof



Rubber Gasket

Thickened for Sealing



Smooth, Hard and Rustproof

Seamless Laser Welding



Various Scenarios



Water Supply System



Sewage Equipment



Pool Aquaculture



Industrial Water Tower

The Switch signals are triggered by the movement of magnetic floats to achieve precise control of liquid level points.

When the water level is low

When the liquid level is low,the float drops and the contacts close, activating the water pump to start water intake.
When the liquid level is high, the float rises, the float contacts open, and the water pump stops operating.

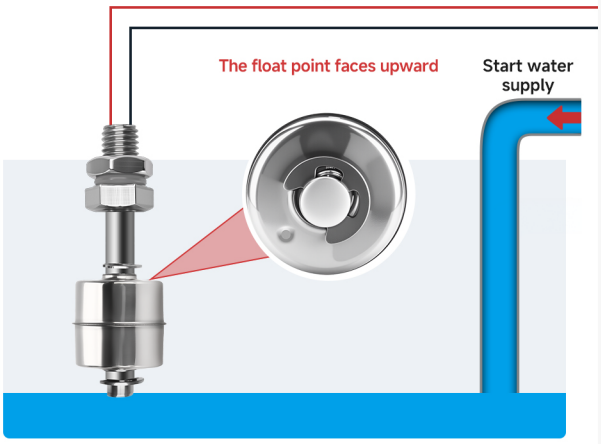

When the liquid level is high

When the liquid level is high, the float rises, the float contacts close, and the water pump activates to drain water.
When the liquid level is low, the float drops, the float contacts open, and the water pump stops operating.

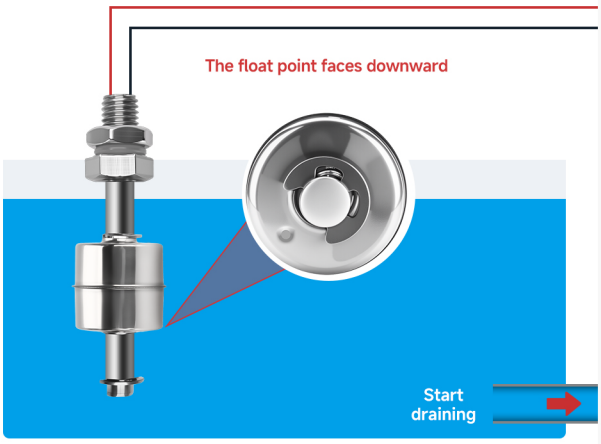

* Product features and appearance structure are subject to change due to technological innovation and improvement without prior notice;
Due to reasons such as shooting, typesetting, printing, etc., there will be slight differences between the product images and the actual products.

LRI Distribuída no Brasil pela LRI | vendas@lri.com.br | 51 2129-3000

Specifications

Model Description

The design of product models and ordering codes is intended to cover all possible specifications of this product series, and they cannot be combined arbitrarily. For any doubts during the initial model selection, please contact technical service engineers for confirmation.If the technical specifications in the product library fail to meet your requirements, customizationis available. * Items marked with an as terisk are customized products.

Liquid Level Controller Hamlin Reed Switch	Material	Length	Rated Voltage
	S: Stainless Steel	0045: 45mm	A1: 110VAC/200VDC
	S6: 316 Stainless Steel	...	A2: 220VAC/200VDC
	T: Titanium Alloy	1000: 1000mm	

ELST - S V 0045 1 - A1

Installation Method	Number of Floats
V: Vertical Installation	1: 1 piece
L: Side Installation	2: 2 piece

Technical Features

Voltage Specification	110VAC/200VDC			220VAC/200VDC		
Rated Power	Max.10W			Max.20W		
Switching Voltage	Max.200VDC/140VAC			Max.200VDC/265VAC		
Rated Current	Max. 0.5A@DC/0.35A@AC			Max. 0.4A@DC/0.3A@AC		
Peak Withstand Voltage	Min.250VDC			Min.400VDC		
Maximum Contact Resistance	100mΩ			100mΩ		
Temperature Range	-25 ~ +100°C			-25 ~ +100°C		
Medium Specific Gravity	0.76g/cm³			0.76g/cm³		
Wire Length	400mm			400mm		
Number of Floats	Single Float	Side-mou-nted Single Float	Double Floats	Single Float	Side-mou-nted Single Float	Double Floats
Number of Wires	2 Wire		4 Wire	2 Wire		4 Wire
Wire Material	Mesh Braided Wire		PTFE Wire	Mesh Braided Wire		PTFE Wire

Overall Dimensions

*Note: Unit: mm. The dimension data is measured manually, so deviations may exist.Please refer to the actual product.

Single Float

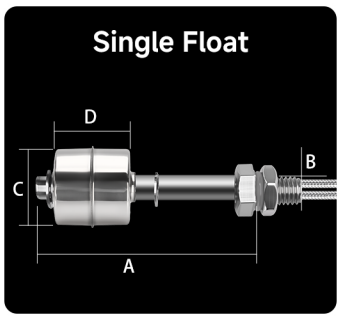

A:Length	B:Thread Diameter×Length	C:Float Width	D:Float Length
45	M10×16	φ28	28
60			
75			
100			
150			
200			
250			
300			
400			
500			
600			
700			
750			
800			
900			
1000			

Double Floats

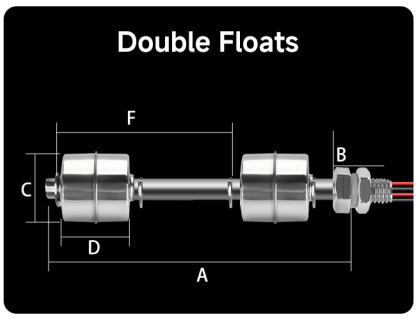

A:Length	F:Spacing	B:Thread Diameter×Length	C:Float Width	D:Float Length
100	48	M10×16	φ28	28
125	60			
150	83			
200	139			
250	188			
300	228			
400	310			
500	408			
600	512			
700	555			
750	600			
800	700			
900	750			
1000	800			

Side-mounted Single Float

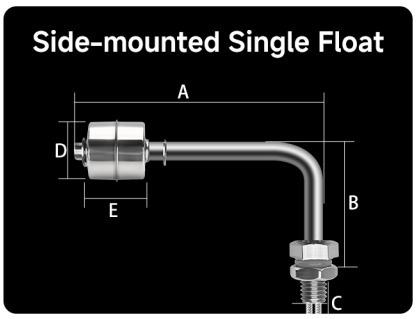

A:Length	B:Right-Angle Width	C:Thread Diameter×Length	D:Float Width	E:Float Length
75	50	M10×16	φ28	28
125	55			

Note The control stroke of the single floatswitch is 10mm

If the liquid level difference to be controlled is large,you can choose a double-float type or a combination of two single-float types with different lengths (one long and one short).



* Product features and appearance structure are subject to change due to technological innovation and improvement without prior notice;
Due to reasons such as shooting, typesetting, printing, etc., there will be slight differences between the product images and the actual products.

Distribuída no Brasil pela LRI | vendas@lri.com.br | 51 2129-3000

NC/NO Manual Adjustment（Achieve water intake/drainage functions ）



Float NO/NC Switching Steps（Factory default：NC）：

1.Remove the circlip with a pair of pliers；2.Remove the float from the rod and flip it 180°； 3.Reassemble in sequence, with the concave spot of the float facing downward at this time.Thus, the NC state is switched to NO.（Water intake is switched to water drainage）；4.Two floats need to change direction simultaneously

Wiring Method

Caution: Float switch cannot directly control loads (water pumps, solenoid valves, alarms, AC contactors). Small relay required for transition.

Single Float Water Supply Control

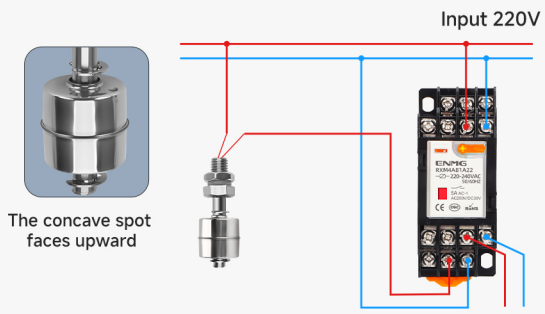

Single Float Drainage Control
(Same wiring; only adjust float direction)

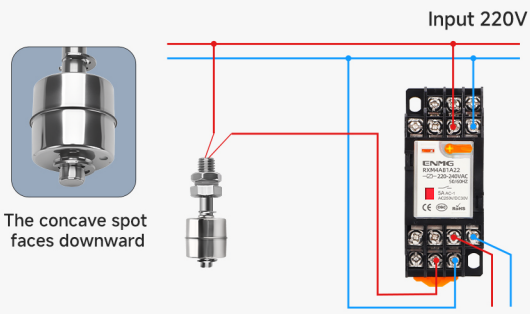

Dual Floats Water Supply Control

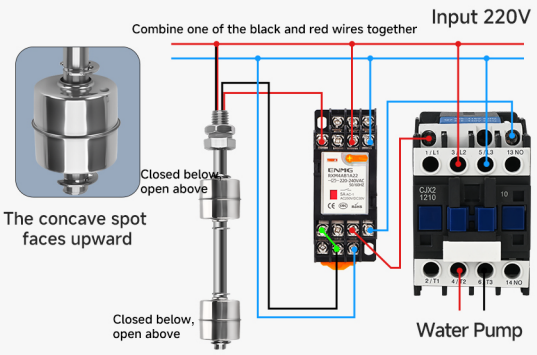

Dual Floats Drainage Control

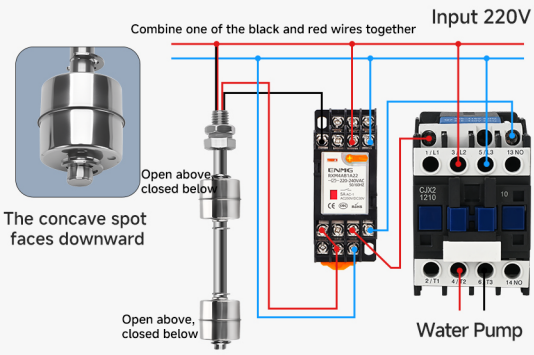

* Product features and appearance structure are subject to change due to technological innovation and improvement without prior notice;
Due to reasons such as shooting, typesetting, printing, etc., there will be slight differences between the product images and the actual products.

Distribuída no Brasil pela LRI | vendas@lri.com.br | 51 2129-3000



* Product features and appearance structure are subject to change due to technological innovation and improvement without prior notice;
Due to reasons such as shooting, typesetting, printing, etc., there will be slight differences between the product images and the actual products.

Distribuída no Brasil pela LRI | vendas@lri.com.br | 51 2129-3000

ENMG 恩爵

Started in 2012, exploring the frontier, leading innovation, self-transformation, the world of ideas.

始于2012年，探索前沿 、 创新引领 、 自我蜕变 、 理念世界。

ENMG INTELLIGENT TECHNOLOGY

恩爵ENMG智能科技

Zhejiang ENMG Intelligent Technology Co., Ltd.

浙江恩爵智能科技有限公司

Wenzhou Yuanzhang Electric Co., Ltd.

温州元璋电气有限公司

公司地址 Address： 浙江省乐清市柳市镇柳江路3788号

联系方式 Telephones： 400-996-2708

官方网站 Website： www.enjue.cc

迪威模型 3D Model： www.3dwhere.com/user/135269

微信公众号
WeChat Public

微信客服
WeChat Clientele Services

入驻平台 ENTRY PLATFORM

在线搜索“恩爵旗舰店”，线上下单实惠方便!

Search for “ENMG Flagship Store” online, ordering online is affordable and convenient !

天猫 Tmall　淘宝 Taobao　1688　京东 JD　拼多多 PDD　抖音 TikTok　速卖通 AliExpress

LRI Distribuída no Brasil pela LRI | vendas@lri.com.br | 51 2129-3000